Adopted April 25, 1979

IOWA WASTEWATER FACILITIES DESIGN STANDARDS

CHAPTER 11

Project Submittals

11.1 GENERAL

11.2 ENGINEERING REPORTS OR FACILITIES PLANS

- 11.2.1 Title of Project
- 11.2.2 Letter of Transmittal
- 11.2.3 Title Page
- 11.2.4 Table of Contents
- 11.2.5 Summary
- 11.2.6 Introduction
- 11.2.7 Existing Conditions and Projections
- 11.2.8 Existing Facilities Evaluation
- 11.2.9 Proposed Facilities Evaluation
- 11.2.10 Combined Sewer Studies
- 11.2.11 Appendices: Technical Information and Design Criteria
- 11.2.12 Construction Grant Project Requirements

11.3 PLANS

- 11.3.1 General
- 11.3.2 Plans of Sewers
- 11.3.3 Plans of Sewage Pumping Stations
- 11.3.4 Plans of Sewage Treatment Plants
- 11.3.5 Construction Grant Project Requirements

11.4 SPECIFICATIONS

- 11.4.1 General
- 11.4.2 Standard Specifications
- 11.4.3 Content
- 11.4.4 Operation During Construction
- 11.4.5 Construction Grant Project Requirements

11.5 REVISIONS TO APPROVED PLANS AND SPECIFICATIONS (ADDENDA AND CHANGE ORDERS)

11.6 OPERATION & MAINTENANCE MANUALS

11.7 PLANS OF OPERATION

CHAPTER 11

Project Submittals

11.1 GENERAL

A construction permit issued by the Iowa Department of Water, Air and Waste Management is required for the construction, installation or modification of any disposal system or part thereof or any extension or addition thereto. A permit to construct minor sewer extensions may be obtained from a local public works department when the Department's permitting authority has been delegated to the local public works department under section 455B.83 of the Code of Iowa and 900--9.4 of the Iowa Administrative Code.

A construction permit shall not be required for the following:

a. Storm sewers that transport only surface water runoff.

b. Any new disposal system or extension or addition to any existing disposal system that receives only domestic or sanitary sewage from a building, housing or occupied by fifteen persons or less.

c. Replacement of previously approved construction where the replacement is done with the exact same methods, materials, capacities and design considerations. However, if there is any change, the proposed construction will require a construction permit.

d. Sanitary sewer service connections, defined as any connection from a single property unit to an existing sanitary sewer.

e. Pretreatment facility where a treatment unit(s) is owned and operated by a person or firm which provides partial reduction of the strength or toxicity of the waste stream prior to additional treatment and disposal by another person, firm, or municipality. However, this Department may require that design basis and construction drawings be filed for information purposes.

f. In-plant modifications of industrial or commercial installations such as process changes, waste reductions, segregation and rerouting of wastes. However, this Department should be informed of all such changes which result in significant changes or reductions.

Engineering services to obtain a construction permit and complete the approved construction shall be performed in 3 stages:

a. Engineering report or facilities plan (not required for minor sewer extensions).

b. Preparation of construction plans, specifications and contractual documents.

c. Construction inspection, administration, compliance and acceptance.

All reports, plans and specifications shall be prepared in conformance with Chapter 114 of the Code of Iowa.

Engineering reports or facilities plans shall be submitted to the Department at least 90 days prior to the date upon which action by the Department is desired, or in accordance with the Iowa Operation Permit or other schedules. The final plans and specifications should not be prepared until the engineering report has been approved. This enables the Department to review the concept and design basis, make appropriate comments, and indicate to the applicant the general acceptability of the proposal before additional expenses are incurred for developing final plans and specifications. After the engineering report has been approved, the final plans and specifications shall be submitted in accordance with 900--60.4 of the Iowa Administrative Code or in accordance with the Iowa Operation Permit or other schedules. These plans and specifications shall be prepared in accordance with the approved engineering report or facilities plan. Any changes from the approved report must receive prior approval from the Iowa Department of Water, Air and Waste Management before incorporation into the plans and specifications.

An application for a permit to construct shall consist of the following:

a. For minor gravity sewer extensions that do not include a lift station, an inverted siphon, a trunk or interceptor sewer or other major appurtenance:

   1. One set of plans and specifications where standard specifications have not been approved.

   2. One copy of the appropriate construction permit application schedules A, B and C and treatment agreement form (Iowa Department of Water, Air and Waste Management Form 29).

b. For non-grant projects other than minor sewer extensions:

   1. Two copies of the preliminary engineering report and any supplement and one copy of construction permit application schedules A, F and G or any other appropriate application schedules.

   2. Initially, one set of plans and specifications with one copy of all applicable construction permit application schedule.

   3. Two additional sets of plans and specifications will be required upon determination that the previously submitted plans and specifications are in accordance with Departmental criteria. The engineer must certify that these plans and specifications include all the details of the previous submittals (original and addenda) and do not include any significant changes or additions.

c. For construction grant projects:

1. Three copies of the facilities plan report and any supplements and one copy of construction permit application schedules A, F and G.

2. Initial four set of plans and specifications with one copy of all applicable construction permit application schedules.

3. Three additional sets of plans and specifications will be required upon determination that the previously submitted plans and specifications are in accordance with Departmental criteria. The engineer must certify that these plans and specifications include all the details of the previous submittals (original and addenda) and do not include any significant changes or additions.

4. One copy of the preliminary Plan of Operation shall be submitted with the project plans and specifications.

A construction permit will not be issued until a complete application has been submitted to the Department and found to be satisfactory. Construction cannot be initiated until the Department has issued a construction permit. The construction must be completed in accordance with the approved plans and specifications. The construction permit shall expire if construction is not commenced within one year of the date of issuance. The executive director may grant an extension of time to commence construction when it is found necessary or justified.

Other local, state, and federal agencies or authorities also have juridiscation over proposed projects falling within the statutory authority of the Iowa Department of Water, Air and Waste Management and must be contacted for the appropriate action necessary.

11.2 ENGINEERING REPORTS OR FACILITIES PLANS

The engineering report or facilities plan assembles basic information; presents design criteria and assumptions; examines alternate projects with preliminary layouts and cost estimates; describes financing methods giving anticipated charges for users; reviews organizational and staffing requirements; offers a conclusion with a proposed project for client consideration; and outlines official actions and procedures to implement the project.

The concept (including process description and sizing), factual data, and controlling assumptions and considerations for the functional planning of sewerage facilities are presented for each process unit and for the whole system. These data form the continuing technical basis for detail design and preparation of construction plans and specifications.

Architectural, structural, mechanical, and electrical designs are usually excluded. Sketches may be desirable to aid in presentation of a project. Outline specifications of process units, special equipment, etc., are occasionally included.

Engineering reports and facilities plans shall be submitted in accordance with 11.1 of these standards. For Construction Grant projects the addi-

tional requirements stated in 11.2.12 of these standards must be met. The following shall be used as a guideline for preparation of the engineering report or facilities plan for projects of significant scope. For projects of limited scope, all items may not apply. Any item deemed necessary by the Department shall be included.

11.2.1 Title of Project

11.2.2 Letter of Transmittal

A one page letter typed on the firm's letterhead and bound into the report should include a statement that this report has been accepted by the client, a statement of the feasibility of the recommended project, an acknowledgement to those giving assistance, and a reference to the project as an outgrowth of an approved areawide wastewater management plan.

11.2.3 Title Page

The title page shall include the title of the project; the municipality, county or other sponsoring agency; the names of officials, managers, superintendents; the name and address of the firm preparing the report; and a certification statement by a registered professional engineer licensed to practice in Iowa, including signature, number and date.

11.2.4 Table of Contents

The table of contents shall include section headings, chapter headings, and subheadings; maps; graphs; illustrations, exhibits; diagrams; and appendices. Number all pages and cross reference by page number.

11.2.5 Summary

The summary shall highlight, very briefly, what was found from the study.

11.2.5.1 Findings

a. Population.

b. Land use and zoning.

c. Receiving waters.

d. Established effluent limitations and expected effluent quality.

e. Wastewater characteristics and concentrations.

f. Immediate and deferred collection system needs.

g. Selected treatment process and site description.

h. Environmental assessment of the selected process.

i. Proposed project cost.

j. Energy requirements.

k. Financing.

l. Administrative organization.

m. Changes - discuss situations that could alter recommended project.

11.2.5.2 Conclusion

11.2.5.3 Recommendations

The recommendations shall include the following appropriate step-by-step actions for the client to implement the conclusions:

a. Official acceptance report.

b. Adoption of recommended project.

c. Submission of report to appropriate agencies for review and approval.

d. Authorization of engineering services for approved project (construction, plans, specifications, contract, documents, etc.).

e. Legal services.

f. Enabling ordinances, resolutions, etc., required.

g. Adoption of sewer-use ordinance and rate structure.

h. Adoption of operating rules and regulations.

i. Financing program requirements.

j. Organization, administration and staffing requirements.

k. Time schedules - implementation, construction and completion dates which reflect applicable hearings, stipulations and abatement orders.

11.2.6 Introduction

11.2.6.1 Purpose

The purpose shall include the reasons for the report and the circumstances leading up to the report.

11.2.6.2 Scope

The scope shall include a definition of the extent of the project and a discussion of the factors, limitations, etc. which were considered in determining the scope of the project.

11.2.7 Existing Conditions and Projections

The report shall include a section on existing conditions and projections including the following:

11.2.7.1 Planning Period

The planning period shall include the total period of time over which waste treatment is evaluated.

11.2.7.2 Land Use

a. Existing service area, expansion, annexation, intermunicipal service, ultimate planning area.

b. Drainage basin, portion covered.

c. Residential, commercial and industrial land use, zoning, population densities, industrial types and concentrations.

11.2.7.3 Demographic and Economic Data

11.2.7.3.1 Demographic Data

a. Population growth, trends, increase during design life of facility (graph).

b. Employment from within and outside service area.

c. Transportation systems, effect of commuter influx.

11.2.7.3.2 Economic Data

a. Sources of funding and status of these sources.

b. Recommended ordinance amendments, revisions, or cancellation and replacement.

c. Sewer-use ordinance.

d. Industrial wastewater surcharges.

e. Existing contracts and agreements (intermunicipal, industrial, etc.).

f. Enforcement provisions including inspection, sampling, detection, penalties, etc.

11.2.8 Existing Facilities Evaluation

The report shall include a section on existing facilities evaluation:

11.2.8.1 Existing Collection System

a. Inventory of existing sewers.

b. Isolation from water supply wells.

c. Adequacy to meet project needs (structural, condition, hydraulic capacity tabulation).

d. Flow monitoring and determination of the amounts of dry weather flow, infiltration and inflow.

e. Overflows and required maintenance, repairs, improvements, and methods for elimination or control.

f. Repair, replacement, and stormwater separation requirements.

g. Sewer system rehabilitation priorities, if selected.

h. Recommended annual program to maintain the sewer system.

i. Required annual expenditure.

11.2.8.2 Existing Treatment Plant Site

a. Area for expansion.

b. Terrain.

c. Subsurface conditions.

d. Isolation from habitation.

e. Isolation from water supply structures.

f. Enclosure of units, odor control, landscaping, etc.

g. Flooding (Elevation of 25 and 100-year flood stage).

11.2.8.3 Existing Treatment Facilities

a. Capacities and adequacy of units (wastewater treatment, sludge processing, and sludge disposal). Tabulate.

b. Relationship and/or applicability to proposed project; consider present design standards.

c. Age and condition.

d. Adaptability to different usages.

e. Structures to be retained, modified, or demolished.

f. Outfall line.

11.2.8.4 Existing Wastewater Characteristics

a. Water consumption from records [total, residential (total and per capita) commercial, industrial].

b. Wastewater flow data - average dry weather, average wet weather, maximum wet weather and peak hourly wet weather flows. (Verify accuracy of installed metering equipment.)

c. Physical, chemical, and biological characteristics, concentrations and mass loadings (pounds).

d. Residential, commercial, industrial, infiltration and inflow fractions, considering organic, solids, toxic, corrosive, etc., substances; tabulate each fraction separately and summarize.

11.2.9 Proposed Facilities Evaluation

The report shall include a section on propsed facilities evaluation.

11.2.9.1 Proposed Collection System

a. Area of service.

b. Inventory of proposed additions and rehabilitation, including initial and projected loadings.

c. Isolation from water supply wells, reservoirs, facilities, etc.

d. Unusual construction problems.

e. Utility interruption and traffic interference.

f. Restoration of pavements, lawns, etc.

g. Basement flooding prevention during power outage.

11.2.9.2 Design Wastewater Characteristics

a. Design wastewater flow - average dry weather, average wet weather, maximum wet weather, and peak hourly wet weather flows.

b. Design physical, chemical, and biological characteristics, concentrations, mass loadings (pounds), and design temperature.

c. Design residential, commercial, industrial, infiltration and inflow fractions, considering organic solids, toxic, corrosive, etc., substances; tabulate each fraction separately and summarize. Treatment agreement forms (Iowa Department of Water, Air and Waste Management Form 31) shall be submitted for each major contributing industry as required in Chapter 64 of the Iowa Department of Water, Air and Waste Management rules.

d. Character of wastewater necessary to insure amenability to process selected.

e. Evaluation of the need for pretreatment of industrial wastewater before discharge to sewers.

11.2.9.3 Receiving Stream Considerations

a. Downstream water uses including water supply, recreation, agricultural, industrial, etc.

b. Impact of proposed discharge on receiving waters.

c. Correlations of plant performance versus receiving water requirements.

11.2.9.4 Treatment Plant Site Requirements

All sites must comply with all applicable siting requirements in 900--64.2 (2 and 3) and 900--64.4 (455B) of the Iowa Administrative Code. Compare advantages and disadvantages relative to cost, hydraulic requirements, flood control, accessibility, enclosure of units, odor control, landscaping, etc., and isolation with respect to potential nuisances and protection of water supply facilities. If the project lies in the flood plain, the Iowa Natural Resources Council should be contacted for appropriate action.

11.2.9.5 Alternatives

All alternatives shall be conformed with the established effluent limitations. The effluent limitations shall delineated. Alternatives shall consider such items as regional solutions, optimum operation of existing facilities, flow and waste reduction, location of facili-

ties, phased construction, necessary flexibility and reliability, sludge disposal, alternative treatment sites, alternative processes, and institutional arrangements. The evaluation of the alternative processes and sites shall include the following.

a. Describe and delineate (schematic diagrams).

b. Preliminary design for cost estimates.

c. Estimates of project costs (total) dated, keyed to construction cost, index, escalated, etc.).

d. Advantages and disadvantages of each.

e. Individual differences, requirements, limitations.

f. Characteristics of process effluent.

g. Comparison of process performance.

h. Environmental assessment of each (including both primary and secondary impacts).

i. Operation and maintenance expenses and energy requirements.

j. Annual expense requirements (tabulation of annual operation, maintenance, personnel, debt of obligation for each alternative.

11.2.9.6 Selected Process and Site

a. Identify and justify process and site selected.

b. Adaptability to future needs.

c. Environmental assessment.

d. Outfall location.

e. Describe immediate and deferred construction.

f. Describe method of providing treatment during construction.

11.2.9.7 Project Financing

a. Review applicable financing methods.

b. Effect of state and federal assistance.

c. Assessment by valuation, front foot, area unit, or other benefit.

d. Charges by connection, occupancy, readiness-to-serve, water consumption, industrial wastewater discharge, etc.

e. Existing debt service requirements.

f. Bond retirement schedule.

g. Tabulate all expenses.

h. Show how representative properties and users are to be effected.

i. Show anticipated typical annual charge to user and non-user.

11.2.9.8 Legal, and Other Considerations

a. Enabling legislation, ordinances, rules and regulations.

b. Statutory requirements and limitations.

c. Contractural considerations and intermunicipal cooperation.

d. Public information and education.

11.2.10 Combined Sewer Studies

A study of the treatment and control of all combined sewer system flow shall be required in the engineering report or facilities planning stage, where applicable.

11.2.10.1 Definition of Combined Sewer

A combined sewer is defined as a sewer designed and constructed with capacity to carry both storm water and sanitary flow.

11.2.10.2 Scope of Combined Sewer Study

Prior approval of the scope of the study must be obtained before initiation of the study. As a minimum the following information must be contained in the scope of the combined sewer study and submitted for approval.

a. Description of the known or estimated extent of the combined sewers in the system.

b. Receiving stream characteristics and water qualit criteria.

c. Potential health hazards.

d. Scope of work necessary to comply with study requirements contained in 11.2.10.3.

e. Cost of study.

f. Other pertinent information.

11.2.10.3 Study Requirements

Good engineering practice dictates and it will be a requirement that the following be submitted during the engineering report or facilities planning stage.

a. The controls and associated cost estimates needed to protect the beneficial use of the stream must be addressed.

b. The alternative and associated general cost estimates for eliminating bypassing of sanitary wastes by installing a separate storm sewer system must be addressed.

c. The alternative and associated general cost estimates for providing treatment to handle all excess flows and eliminating any bypassing must be addressed. This may be accomplished by either building a storm water retention lagoon and gradually returning the excess flow to the treatment plant during off-peak periods or providing a plant large enough to handle all flows. Either of these alternatives must provide treatment to meet the limitations of the Operation Permit. This evaluation should include duration, frequency and intensity data for rainfall.

   The methodology of arriving at treatment plant unit capacities and storage volumes should be outlined as well as the mode of operation of the plant during extended wet and dry periods and during the flow transition.

d. The alternative and associated general cost estimates for segregating sanitary sewers from the area served by combined sewers must be addressed. This alternative should include not only the rerouting of the present separate sewers but also the prevention of any sewer extensions tributary to the existing combined sewers.

e. A long range plan should be presented for segregation of combined sewers for these areas where neither elimination or treatment are determined to be feasible.

11.2.10.4 Required Action Resulting from Study

This Department will review on a case-by-case basis the necessary action needed to minimize, reduce, or eliminate the volume and frequency of bypassing. The alternative plans presented will be used in evaluating the controls necessary in each case. The required controls may be elimination of the combined sewers, providing treatment, segregation of combined sewers or varying combinations of all three options. The applicant will be informed of the action required during the engineering report or facilities planning stage of the treatment upgrade. The required action will be undertaken by the applicant through local financing unless this Department and EPA specifically state that item(s) will be eligible for construction grant funding.

11.2.11 Appendices: Technical Information and Design Criteria

The report shall include an appendices section including the following:

11.2.11.1 Collection System

a. Design tabulations - flow, size, velocities, etc.

b. Regulator or overflow design.

c. Pump station calculations, including energy requirements and stand-by power.

d. Special appurtenances.

e. Stream crossings.

f. System map.

11.2.11.2 Process Facilities

a. Influent hydraulic and organic loadings - minimum, average, peak and effect. (Wastewater and sludge processes).

b. Process selection and basis - flow equalization, prelmininary treatment processes (screening and grit removal), biological treatment processes, tertiary treatment processes, disinfection and solids handling system.

c. Chemical addition and control facilities.

d. Physical control and flow metering facilities.

e. Recycle.

f. Unit dimensions.

g. Rates and velocities.

h. Detentions.

i. Loadings to and removal effeciencies through each unit operation; total removal efficiency and effluent quality (concentration and pounds).

j. Energy retirement.

k. Flexibility.

i. Reliability and stand-by power.

11.2.11.3 Process Diagrams

a. Wastewater flow diagram showing process configuration, interconnnecting piping, reliability, flexibility, etc.

b. Solids handling flow diagram showing process configuration, interconnecting piping, reliability, flexibility, etc.

11.2.11.4 Collection System Operation and Maintenance

11.2.11.5 Process Facilities Operation and Maintenance

11.2.11.6 Laboratory Testing, Personnel, Space and Equipment Requirements.

11.2.11.7 Office Space for Administrative Personnel and Records

11.2.11.8 Personnel Services - Locker Rooms and Lunch Rooms

11.2.11.9 Support Data

a. Outline unusual specifications, construction materials, and construction methods.

b. Maps, photographs, diagrams.

c. Other.

11.2.12 Construction Grant Project Requirements

Facilities plans subject to federal grant funding shall meet the content and format requirements as specified by appropriate Federal Regulations and Guidelines as published by the U.S. Environmental Protection Agency as well as the previously listed items in this section.

The design engineer should obtain 40 CFR 35 "Construction Grants for Waste Treatment Works" to serve as a basic document. Other local, state and federal agencies or authorities also have jurisdication over proposed projects falling within the statutory authority of the Iowa Department of Water, Air and Waste Management and must be contacted for the appropriate action necessary. These include Office for Planning and Programming, regional planning agency, U.S. Fish and Wildlife Service, U.S. Army Corps of Engineers, Iowa Natural Resources Council, and the State Historical Preservation Officer.

11.3 PLANS

11.3.1 General

All plans for sewage works shall bear a suitable title showing the name of the muncipality, sewer district, institution or other owner; and shall show the scale in feet, a graphical scale, the north arrow, date and a certification statement by a registered professional engineer licensed to practice in Iowa, including signature, number and date. A space should be provided for signature and approval stamp of the appropriate reviewing and approving officials and agencies.

The plans shall be clear and legible (suitable for microfilming). They shall be drawn to a scale which will permit all necessary information to be plainly shown. The size of the plans generally should not be larger than 30 inches by 42 inches nor smaller than 22 inches by 36 inches. Datum used should be indicated. Locations and logs of test borings, when made, shall be shown on the plans. Blueprints shall not be submitted.

Detail plans shall consist of plan views, elevations, sections and supplementary views which, together with the specifications and general layouts, provide the working information for the contract and construction of the works. Dimensions, relative elevations of structures, location and outline form of equipment, location and size of piping, water levels, and ground elevations shall be included.

For Construction Grants projects, the additional requirements stated in 11.3.5 of these standards must be met.

11.3.2 Plans of Sewers

Plans shall be submitted in accordance with 11.1 of these standards.

11.3.2.1 General Location Plan

A comprehensive plan of the existing and proposed sewers for projects involving new sewer systems and additions to or replacement of existing systems shall include the following:

a. Existing or proposed streets and all streams or water surfaces shall be clearly shown.

b. The boundary lines of the municipality or the sewer district, and the area to be sewered, shall be shown.

c. For new sewer systems, the plan shall show the location, size and direction of flow of all proposed sanitary sewers draining to the treatment works concerned. For sewer extensions to existing systems, the plan shall show the location, size and direction of flow of all existing and proposed sanitary and combined sewers in the adjacent area. An index to the location of the detail plan sheets shall be included.

11.3.2.2 Detail Plans

Profiles should have a horizontal scale of not more than 100 feet to the inch and a vertical scale of not more than 10 feet to the inch. Plan view should be drawn to a corresponding horizontal scale and preferably be shown on the same sheet. Plans and profiles shall show:

a. Location of streets and sewers.

b. Line of ground surface; size of pipe; length between manholes; invert and surface elevation at each manhole; and grade of sewer between each two adjacent manholes. All manholes shall be numbered on the profile.

Where there is any question of the sewer being sufficiently deep to serve any residence, the elevation and location of the basement floor shall be plotted on the profile of the sewer which is to serve the house in question. The engineer shall state that all sewers are at least 2 feet below adjacent basement floor elevations except where otherwise noted on the plans.

c. Locations of all special features such as inverted siphons, concrete encasements, elevated sewers, etc.

d. All known existing structures and utilities, both above and below ground, which might interfere with the proposed construction, particularly water mains, gas mains, storm drains, and telephone and power conduits.

e. Special detail drawings, made to a scale to clearly show the nature of the design, shall be furnished to show the following particulars:

All stream crossings and sewer outlets, with elevations of the stream bed and of normal and extreme high and low water levels.

Details of all special sewer joints and cross-sections.

Details of all sewer appurtenances such as manholes, lampholes, inspection chambers, inverted siphons, regulators, and elevated sewers.

11.3.3 Plans of Sewage Pumping Stations

Plans shall be submitted in accordance with 11.1 of these standards.

11.3.3.1 General Location Plan

A location plan shall be submitted for projects involving construction or revision of pumping stations. This plan shall show the following:

a. The location and the extent of the tributary area.

b. Any boundary lines of the municipality, sewer district or development within the tributary area.

c. The location of the pumping station, force main, and downstream sewer.

11.3.3.2 Detail Plans

Detail plans shall be submitted showing the following, where applicable:

a. Topography of the site.

b. Existing pump station.

c. Proposed pumping station, including provisions for installation of future pumps or ejectors.

d. Elevation of high water at the site and maximum elevation of sewage in the collection system upon occasion of power failure.

e. Maximum hydraulic gradient in downstream gravity sewers when all installed pumps are in operation.

f. Soil borings and groundwater elevations.

11.3.4 Plans of Sewage Treatment Plants

Plans shall be submitted in accordance with 11.1 of these standards.

11.3.4.1 General Location Plan

A location plan shall be submitted, showing the sewage treatment plant in relation to the remainder of the system.

Sufficient topographic features shall be included to indicate its location with relation to streams and the point of discharge of treated effluent.

11.3.4.2 General Layouts

Layouts of the proposed sewage treatment plant shall be submitted, including:

a. General plant layout showing topography of the site, location of plant structures, location of utility systems serving the plant processes, location of soil borings, and areas for future expansion.

b. Schematic flow diagram showing the flow through various plant units.

c. Piping diagram, including any arrangements for by-passing individual units. Materials handled and direction of flow through pipes shall be shown.

d. Minimum, average and peak hydraulic profiles showing the flow of sewage, supernatant liquor, and sludge.

11.3.4.3 Detail Plans

Detailed plans shall show the following:

a. Location, dimensions, and elevations of all existing and proposed plant facilities.

b. Detailed piping arrangement for wastewater and sludge streams.

c. Elevations of high and low water level of the body of water to which the plant effluent is to be discharged.

d. Adequate description of any features not otherwise covered by specifications or engineer's report.

e. Drainageways on treatment plant site and existing and proposed erosion controls.

11.3.5 Construction Grant Project Requirements

Plans subject to federal grant funding shall meet the content and format requirements as specified by appropriate Federal regulations and guidelines as published by the U.S. Environmental Protection Agency as well as the previously listed items in this section.

11.4 SPECIFICATIONS

11.4.1 General

Complete technical specifications for the construction of sewers, sewage pumping stations, sewage treatment plants, and all appurtenances, shall accompany the plans.

Specifications shall be submitted in accordance with 11.1 of these standards. For Construction Grant projects, the additional requirements stated in 11.4.5 must be met.

11.4.2 Standard Specifications

Governing agencies and private engineering firms may file for approval of their standard sanitary sewer construction specifications with this Department. A minimum of two copies of the proposed standard specifications shall be submitted. The standard specifications must contain the following:

a. Certification statement by a registered professional engineer licensed to practice in Iowa, including signature, number and date.

b. If the engineer preparing the specifications is not a permanent, full-time employee of the agency submitting the specifications, then the governing body of the agency submitting the specifications must also submit a resolution adopting th specifications submitted as the official specifications of the agency.

Upon arrival of standard specifications for sanitary sewer construction, the Department will not require submission of specifications with the plans. However, the Department will require that all plans contain a statement that all construction shall be in accordance with the approved standard specifications currently on file with the Department. Additional special provisions for a particular project can also be utilized in conjunction with approved standard specifications. The applicant should submit copies of the special provisions properly certified by an engineer. When a revision to an approved standard specification is required by revision of Department standards or governing agency initiative, three copies of the revision, properly certified and adopted, shall be submitted.

11.4.3 Content

The specifications shall include a certification statement by a registered professional engineer licensed to practice in Iowa, including signature, number and date.

The specifications accompanying construction drawings shall include, but not be limited to, all construction information not shown on the drawings which is necessary to inform the builder i detail of the design requirements as to the quality of materials and workmanship and fabrication of the project and the type, size,

strength, operating characteristics, and rating of equipment; allowable infiltration; the complete requirements for all mechanical and electrical equipment, including machinery, valves, piping, and jointing of pipe; electrical apparatus, wiring, instrumentation, and meters; laboratory fixtures and equipment; operating tools; construction materials; special filter materials such as stone, sand, gravel, or slag; miscellaneous appurtenances, chemicals when used; instructions for testing materials and equipment as necessary to meet design standards; and performance tests for the completed works and component units. It is suggested that these performance tests be conducted at design load conditions wherever practical.

11.4.4 Operation During Construction

Specifications shall contain a program for keeping existing treatment plant units in operation during construction of plant additions. Should it be necessary to take plant units out of operation, a shutdown schedule which will minimize pollutional effects on the receiving stream shall be reviewed and approved in advance by the Iowa Department of Water, Air and Waste Management and shall be adhered to.

11.4.5 Construction Grant Project Requirements

Specifications subject to federal grant funding shall meet the content and format requirements as specified by appropriate federal regulations and guidelines as published by the U.S. Environmental Protection Agency as well as the previously listed items in this section.

11.5 REVISIONS TO APPROVED PLANS AND SPECIFICATIONS (ADDENDA AND CHANGE ORDERS)

Any deviations from approved plans or specifications affecting capacity, flow, operation of units, or point of discharge shall be approved in writing before such changes are made. Plans or specifications so revised should, therefore, be submitted well in advance of any construction work which will be affected by such changes, to permit sufficient time for review and approval. The applicant or a representative shall submit a minimum of three copies of each revision for non-grant projects and a minimum of five copies for construction grant projects. The submittal shall include any appropriate revised construction permit application schedules.

Structural revisions or other minor changes not affecting capacities, flows, or operation will be permitted during construction without approval. "As Built" plans clearly showing such alterations shall be submitted to the reviewing agency at the completion of the work.

Revisions subject to federal grant funding will meet the content and format requirements as specified by appropriate federal regulations and guidelines as published by the U.S. Environmental Protection Agency as well as the previously listed items in this section.

11.6 OPERATION AND MAINTENANCE MANUALS

A complete operation and maintenance manual shall be provided for each wastewater treatment facility with larger than 15 P.E. design capacity prior to the beginning of the operation of the facility. The applicant or a representative shall initially submit one copy of the manual. When the manual is determined to be in accordance with applicable criteria, three final copies of the manual shall be submitte.

The manual shall be written in a manner easily understandable to the treatment plant operator and should have two distinct sections: operational section and maintenance section. The manual should cover the Iowa Operation Permit for the facility and all reporting requirements contained therein. The manual should cover all details of the operation and maintenance of the wastewater treatment facility to include valve or gate settings, piping diagrams, lubrication schedules, safety, emergency operation, sludge disposal and other items of concern. When the project utilizes federal funds, applicable federal guidelines as to format and content and submission schedules shall be followed.

11.7 PLANS-OF OPERATION

A Plan of Operation for a new or expanded wastewater treatment facility utilizing construction grant funding should provide an action plan and implementation schedule to assure that all necessary actions to properly prepare for facility start-up and continued operation are accomplished in a timely manner. The Plans of Operation shall meet the content and form requirements as specified by appropriate federal regulations and guidelines as published by the U.S. Environmental Protection Agency.

A preliminary Plan of Operation is required prior to submittal of a final Plan of Operation. The preliminary Plan of Operation is required as a special condition of a Step 2 grant and one copy shall be submitted to the Iowa Department of Water, Air and Waste Management with the project plans and specifications.

The final Plan of Operation is required as a special condition of a Step 3 grant and four copies shall be submitted to the Iowa Department of Water, Air and Waste Management with the Operation and Maintenance Manual. The final Plan of Operation should essentially be the same as the preliminary Plan of Operation with the exception that the implementation schedule shall contain actual dates.

Adopted Sept. 6, 1978
Amended March 28, 1979
Amended May 20, 1987

IOWA WASTEWATER FACILITIES DESIGN STANDARDS

CHAPTER 12

IOWA STANDARDS FOR SEWER SYSTEMS

12.0 GLOSSARY

12.0.1 Lateral - A sewer that discharges into a submain or other sewer and has no other common sewer tributary to it.

12.0.2 Submain - A sewer into which the wastewater from two or more lateral sewers is discharged and which discharges into a main or trunk.

12.0.3 Main - The principal sewer to which submains are tributary; also called trunk sewer.

12.0.4 Trunk - The principal sewer to which submains are tributary; also called main sewer.

12.0.5 Interceptor - A sewer used to transport the flows from main and trunk sewers to a central point for treatment and discharge.

12.0.6 Outfall - A sewer that receives wastewater from a treatment plant and carries it to a point of final discharge.

12.1 GENERAL

The Iowa Standards for Sewer Systems are designed to be used for review of plans and specifications and the construction of sanitary sewer systems and extensions to such systems. When engineering justification satisfactory to the executive director is provided substantially demonstrating that variation from the standards will result in either 1) at least equivalent effectiveness while significantly reducing costs, or 2) improved effectiveness, such a variation from standards may be accepted by the executive director.

12.2 DESIGN PERIOD

In general, sewer system design shall consider the estimated ultimate tributary population, except in considering parts of the system that can be readily increased in capacity. Similarly, consideration shall be given to the maximum anticipated capacity of institutions, industrial parks, etc. Laterals and submains shall be designed for estimated ultimate development. The design of trunks (mains) and interceptors) shall take into consideration a reasonable planning period (50 years) and cost effectiveness. When the project does not provide for the ultimate capacity, a report detailing a plan for providing the ultimate capacity shall be developed.

12.3 MINIMUM BASIS OF DESIGN

12.3.1 Assumptions

12.3.1.1 Dry Weather Flow

One hundred gallons per capita per day (gpcd) shall be used in design calculations as the minimum average dry weather flow. This 100 gpcd value may, with adequate justification, include maximum allowable infiltration for proposed sewer lines.

12.3.1.2 Sewer Design Capacity

Maximum hourly domestic flow, additional maximum waste water flow from industrial plants, inflow and groundwater infiltration, and sewage pumping station capacity shall be considered in determining the required capacities of sanitary sewers.

12.3.1.3 Infiltration Design Allowance

If no actual data is available, an assumed infiltration design allowance for existing sewers should be added to the design flow. For existing systems, the minimum infiltration design allowance for the existing sewers shall be no less than 200 gallons per inch of pipe diameter per mile of pipe (gpdpipm). Allowance for service lines should be included.

12.3.1.4 Design Flow

The minimum design flow may be determined when the average dry weather flow is known. The minimum design flow may be calculated by multiplying the average dry weather flow by the ratio found in Appendix I.

12.3.1.5 Minimum Design Equivalents

Type of development

a. single family - 3-3.5 units/acre, 3 people/-unit, or 10 people/acre

b. multi-family (med. density - 4.5 units/acre, 3 people/unit, or 15 people/-acre

c. multi-family (high density) - 6-12 units/-acre, 2.5 people/unit, or 30 people/acre

d. commercial - 5000 gpd/acre

e. industrial - 10,000 gpd/acre

Lower design values may be approved by the executive director for known or measured flow rates.

12.3.1.6 Carrying Capacity of Pipe

Pipe sizes 8" - 15" shall carry the design flow at a depth of no more than 0.75 of the pipe diameter.

12.4 MATERIALS

Standards shall be as listed below for the respective materials.

a. Rigid Pipes	Material Spec.	Joint Spec.
Clay	ASTM C 700-75	ASTM C425-75
Non Reinforced Concrete	ASTM C 14-75	ASTM C 443-76
Reinforcement Concrete	ASTM C 76-76 ASTM C 655-73	ASTM C 443-76
Concrete Pressure Pipe	ASTM C 361-76	ASTM C 361-76
Cast Iron	ANSI A21-1-67 (AWWA C101-67) ANSI A21-6-75 (AWWA C106-75) ANSI A21.8-75 (AWWA C108-75) ANSI/AWWA C110-77	ANSI A21-11-72 (AWWA C111-72)
Ductile Iron	ANSI A21.50-76 (AWWA C150-76) ANSI A21.51-76 (AWWA C151-76) ANSI/AWWA C110-77 ASTM A536-77	ANSI A21.11-72 (AWWA C111-72)

b. Flexible Pipes	Material Spec.	Joint Spec.
Polyvinyl Chloride (PVC)	ASTM D3034-77 ASTM D3033-77 (SDR $\leq$ 35)	ASTM D3212-76 ASTM D2855-77

c. Composite Pipes

Composite Pipes	Material Spec.	Joint Spec.
Acrylonitrile Butadiene Styrene (ABS) Composite	ASTM D2680-76	ASTM D2680-76

d. Pressure Pipe

All pipe for pressure applications shall conform insofar as appropriate, to the standard specifications referred to in the "Iowa Standards for Water Supply Distribution Systems".

All other sewer pipe material shall conform with the appropriate ANSI, AWWA or ASTM specifications.

12.5 DETAILS OF DESIGN

12.5.1 Diameter

No public gravity sanitary sewer shall be less than eight inches in diameter, with the following exception.

For unsewered communities, six-inch diameter sewers may be used for the last 800 feet (approximately two blocks) of sewer, provided the six-inch sewer has sufficient hydraulic capacity and is a dead end not subject to future extension. A manhole or a cleanout must be provided at the end of the six-inch lateral sewer pipe.

12.5.2 Depth

Sewers should be sufficiently deep so as to receive sewage from basements and to prevent freezing. Precautions such as insulation and increased slope shall be provided for sewers that cannot be placed at a depth sufficient to prevent freezing.

12.5.3 Slope

All sewers shall be designed and constructed to give average velocities when flowing full of not less than 2.0 feet per second based on Kutter's formula using an "n" value of 0.013 for raw sewage. The following are the minimum slopes which shall be provided.

Sewer Size	Minimum Slope (ft./100 ft.)
8"	0.400
10"	0.280
12"	0.220
15"	0.150
18"	0.120

21"	0.100
24"	0.080
27"	0.067
30"	0.058
36"	0.046

Smaller "n" values may be considered when the wastes are treated, or for pipes 48 inches or larger. A velocity less than 2.0 fps may be considered only under the following conditions.

a. Deep or continuous rock excavation.

b. Velocities down to 1.5 feet per second may be accepted only when a lift station can be eliminated, and where the ratio of the cost of constructing a lift station and sewer to the cost of constructing a sewer only is greater than five. Cost ratios shall be based on a lift station designed to meet not more than the minimum standards of the Iowa Department of Water, Air and Waste Management.

Under no circumstances will the average design velocity when flowing full be allowed to drop below 1.5 feet per second based on Kutter's formula using an "n" value of 0.013.

The following exceptions to the above requirements in this section shall apply for unsewered communities only.

A minimum velocity of 2.0 feet per second when flowing full should be maintained in all sewer mains. However, in specific cases where savings in sewer cost are possible or a lift station could be eliminated, a minimum sewer velocity of 1.5 feet per second when flowing full will be permitted. An "n" value of 0.013 shall be used for design of PVC pipe, vitrified clay pipe, and ABS truss pipe. Minimum slopes for 8" sewers flowing full at 2.0 feet per second and 1.5 feet per second shall be 0.40 ft./100 ft. and 0.22 ft./100 ft. Minimum slopes for 6" sewers flowing full at 2.0 feet per second and 1.5 feet per second shall be 0.60 ft./100 ft. and 0.34, ft./100 ft. In cases where a minimum sewer design velocity of 1.5 feet per second is used, the city will be required to give written assurance to the department that any additional sewer maintenance required by reduced slopes and velocities will be provided.

12.5.4 Alignment

Sewers 24 inches or less shall be laid with straight alignment between manholes.

The following exceptions to the above requirement in this section shall apply for unsewered communities only.

Vertical and horizontal curved or variable grade sewer construction may be proposed by the design engineer. Whenever curved or variable grade sewer construction is proposed, the design engineer is to develop a proposed design basis and submit it to the department for review.

The city will be required to give written assurance that arrangements will be made for hydraulic sewer cleaning equipment to be available when necessary for cleaning curvilinear sewers.

12.5.5 Increasing Size

When sewers of different sizes and greater than 10 inches in diameter are joined, the inverts should be placed to maintain energy gradient. An approximate method for securing these results is to place the 0.8 depth point of both sewers at the same elevation.

12.5.6 High Velocity Protection

Where velocities greater than 15 feet per second are attained, special provisions shall be made to protect against displacement by erosion and shock.

12.5.7 Manholes

12.5.7.1 Location

a. Manholes shall be installed:

1. at the end of each sewer line;
2. at all changes in pipe size, grade or alignment;
3. at all sewer pipe intersections;
4. at intervals not exceeding 400 feet for sewers 24 inches or less or at intervals not exceeding 500 feet when adequate cleaning equipment is available.

b. Spacing of manholes over 500 feet may be permitted in sewers larger than 24 inches if the owner has adequate cleaning equipment.

c. Cleanouts may be permitted in place of a manhole at the end of lines which are less than 150 feet in length.

d. The following exceptions to the requirements for manhole location and cleanouts in this section shall apply for unsewered communities only.

Manhole spacing for 6 and 8-inch sewers shall be a maximum of 400 feet or at intervals not exceeding

500 feet when adequate cleaning equipment is available. All other sewers shall have a maximum manhole spacing of 800 feet, with manholes also to be placed at the junctions of sewers. When the manhole spacing exceeds 400 feet, the city will be required to give written assurance that appropriate sewer cleaning equipment suitable to clean the distances between manholes will be made available when necessary.

Cleanouts can be installed at the ends of sewers of any size in lieu of manholes. If the sewer is ever extended, the cleanout must be removed and a sewer manhole constructed at that point if the maximum distance between manholes has been reached. Cleanout lids should be bolted down to prevent entry of foreign objects.

12.5.7.2 Drop Type

A drop pipe should be provided for a sewer entering a manhole at an elevation of 24 inches or more above the manhole invert. Where the difference in elevation between the incoming sewer and the manhole invert is less than 24 inches, the invert should be filleted to prevent solids deposition.

12.5.7.3 Diameter

The minimum diameter of manholes shall be 48 inches. The minimum diameter of manhole openings shall be 22 inches.

12.5.7.4 Watertightness

Manholes shall be pre-cast or poured in place concrete. Manholes shall be waterproofed on the exterior.

Inlet and outlet pipes shall be joined to the manhole with a gasketed flexible watertight connection or any watertight connection arrangement that allows differential settlement of the pipe and manhole wall to take place.

12.5.7.5 Frame and Cover Assembly

Manhole covers shall be non-vented; however, covers with a pickhole are acceptable. Frame and cover assemblies shall weigh at least 300 pounds when installed in areas subject to vehicular traffic and at least 200 pounds in other areas.

Watertight cover assemblies shall be required on manholes subject to flooding. Bolt-down cover assemblies shall be required on manholes subject to inundation on a floodplain.

12.5.7.6 Flow Channel

The flow channel through manholes shall be made to conform in shape and slope to that of the sewers.

12.5.8 Protection of Water Supplies

12.5.8.1 Cross Connections

There shall be no physical connection between a public or private potable water supply system and a sewer, or appurtanence thereto, which would permit the passage of any wastewater or polluted water into the potable water supply.

12.5.8.2 Wells

Sewers constructed of standard sewer materials shall not be laid within 75 feet of a public well or 50 feet of a private well. Sewers constructed of water main materials may be laid within 75 feet of a public well and within 50 feet of a private well but no closer than 25 feet to either.

12.5.8.3 Horizontal Separation of Gravity Sewers from Water Mains

Gravity sewer mains shall be separated from water mains by a horizontal distance of at least 10 feet unless:

a. the top of a sewer main is at least 18 inches below the bottom of the water main, and

b. the sewer is placed in a separate trench or in the same trench on a bench of undisturbed earth at a minimum horizontal separation of 3 feet from the water main.

When it is impossible to obtain the required horizontal clearance of three feet and a vertical clearance of 18 inches between sewers and water mains, the sewers must be constructed of water main materials meeting both a minimum pressure rating of 150 psi and the requirements of Sections 8.2 and 8.4 of the "Iowa Standards for Water Supply Distribution Systems." However, a linear separation of at least 2 feet shall be provided.

12.5.8.4 Separation of Sewer Force Mains from Water Mains

Sewer force mains and water mains shall be separated by a horizontal distance of at least 10 feet unless:

a. the force main is constructed of water main materials meeting a minimum pressure rating of 150 psi and the requirements of Section 8.2 and 8.4 of the "Iowa Standards for Water Supply Distribution Systems" and

b. the sewer force main is laid at least 4 linear feet from the water main.

12.5.8.5 Separation of Sewer and Water Main Crossovers

Vertical separation of sanitary sewers crossing under any water main should be at least 18 inches when measured from the top of the sewer to the bottom of the water main. If physical conditions prohibit the separation, the sewer may be placed not closer than 6 inches below a water main or 18 inches above a water main. The separation distance shall be the maximum feasible in all cases.

Where the sewer crosses over or less than 18 inches below a water main one full length of sewer pipe of water main material shall be located so both joints are as far as possible from the water main. The sewer and water pipes must be adequately supported and have watertight joints. A low permeability soil shall be used for backfill material within 10 feet of the point of crossing.

12.5.8.6 Exceptions

Should physical conditions exist such that exceptions to Sections 12.5.8.3, 12.5.8.4, and 12.5.8.5 of this standard are necessary, the design engineer must detail how the sewer and water main are to be engineered to provide protection equal to that required by these sections.

12.5.9 Connection of Dissimilar Pipe

Suitable couplings shall be used for joining dissimilar materials. The leakage limitations on these joints shall be in accordance with Section 12.7 of these standards.

12.5.10 Inverted Siphons

Inverted siphons should have not less than 2 barrels, with a minimum pipe size of 6 inches and shall be provided with necessary appurtenances for convenient flushing and

maintenance; the manholes shall have adequate clearance for rodding; and in general, sufficient head shall be provided and pipe sizes selected to secure velocities of at least 3.0 feet per second for average flows. The inlet and outlet details shall be arranged so that the normal flow is diverted to 1 barrel, and so that either barrel may be cut out of service for cleaning.

12.5.11 Sewer Crossing Under a Waterway

The top of all sewers entering or crossing streams shall be at a depth below the natural bottom of the stream bed sufficient to protect the line. One foot of cover over the top of the line is required where the sewer is located in rock or cased and three feet of cover is required in other material. In major streams, more than the three feet of cover may be required.

In paved channels, the top of the sewer line should be placed below the bottom of the channel pavement. Sewer outfalls, headwalls, manholes, gate boxes, or other structures shall be so located that they do not interfere with the free discharge of flood flows of the stream. Sewers located along streams shall be located outside of the stream bed.

Sewers entering or crossing streams shall be constructed of cast or ductile pipe with mechanical joints or shall be so otherwise constructed that they will remain water tight and free from changes in alignment or grade. Sewer systems shall be designed to minimize the number of stream crossings. The stream crossings shall be designed to cross the stream as nearly perpendicular to the stream flow as possible. Construction methods that will minimize siltation shall be employed. Material used to backfill the trench shall be stone, course aggregate, washed gravel, or other materials which will not cause siltation. Upon completion of construction, the stream shall be returned as near as possible to its original condition. The stream banks shall be seeded and planted, or other methods employed to prevent erosion. The design engineer shall include in the project specifications the method or methods to be employed in the construction of sewers in or near streams to provide adequate control of siltation.

12.5.12 Aerial Crossings

Support shall be provided at all joints in pipes utilized for aerial crossings. The supports shall be designed to prevent overturning and settlement.

Precautions against freezing, such as insulation and increased slope, shall be provided. Expansion jointing shall be provided between above-ground and below-ground sewers.

For aerial stream crossings the impact of flood waters and debris shall be considered. The bottom of the pipe should be placed no lower than the elevation of the 50 year flood.

12.6 DETAILS OF CONSTRUCTION

12.6.1 Excavation

12.6.1.1 Trench Bottom

The trench shall be excavated to grade. Bell holes shall be the minimum size that will permit construction of satisfactory joints and ensure uniform bearing of the barrel on the trench bottom, while avoiding bearing on the bells.

12.6.1.2 Trench Width

The width of the trench shall be ample to allow the pipe to be laid and jointed properly and to allow the backfill to be placed and compacted as needed. The trench sides shall be kept as nearly vertical as possible. When wider trenches are dug, appropriate bedding class and pipe strength shall be used.

12.6.1.3 Rock Removal

Ledge rock, boulders and large stones shall be removed to provide a minimum clearance of four inches below and on each side of all pipe.

12.6.1.4 Dewatering

All water entering the excavations or other parts of the work shall be removed until all the work has been completed. No sanitary sewer shall be used for the disposal of trench water, unless specifically approved by the engineer and then only if the trench water does not ultimately arrive at existing pumping or sewage treatment facilities.

12.6.2 Bedding

12.6.2.1 Rigid Pipe

Bedding classes A, B, or C, as described in ASTM C12-74 (ANSI A106.2) or ASCE MOP No. 37, shall be used for all rigid pipe provided the proper strength pipe is used with the specified bedding to support the anticipated load.

12.6.2.2 Flexible Pipe

Bedding classes I, II, or III, as described in ASTM D2321-74 (ANSI K65.171) shall be used for all flexible pipe provided the proper strength pipe is used with the specified bedding to support the anticipated load.

12.6.2.3 Composite Pipe

Except as described in ASTM D2680-76, the bedding classes for composite pipe shall be the same as for flexible pipe.

12.6.2.4 Bearing and Support

If the material encountered at the bottom of the trench is not satisfactory for bedding pipe, the unsatisfactory material shall be removed and replaced by material that will give proper support and compaction.

12.6.3 Installation

12.6.3.1 Rigid Pipe

Installation procedures, as described in ASTM C12-74 (ANSI A106-2) shall be used for all rigid pipe provided the proper strength of pipe is used.

12.6.3.2 Flexible Pipe

Installation procedures, as described in ASTM D2321-74 (ANSI K65.171) shall be used for all flexible pipe provided the proper strength pipe is used.

12.6.3.3 Composite Pipe

Installation procedures for composite pipe shall be the same as for flexible pipe except as specified in ASTM D2680-76.

12.6.4 Backfill

Backfill shall be of suitable material removed from excavation except where other suitable material is specified. Debris, frozen materials, large clods or stones, organic matter, or other unstable materials shall not be used for backfill within 2 feet of the top of the pipe.

Backfill shall be placed in such a manner as not to disturb the alignment of the pipe.

12.7 TESTING

12.7.1 Deflection Test

Deflection tests shall be performed on all flexible pipe. The deflection test shall be conducted after the final backfill has been in place at least 30 days.

No pipe shall exceed a deflection of 5%.

If the deflection test is to be run using a rigid ball or mandrel, it shall have a diameter equal to 95% of the inside diameter of the pipe and the tests shall be performed without mechanical pulling devices.

12.7.2 Allowable Leakage

The maximum allowable infiltration or exfiltration for any new gravity sanitary sewer section, including all manholes, is 200 gallons per inch of diameter per mile of pipe per day. Manholes may be tested separately.

12.7.3 Leakage Test

12.7.3.1 Line Infiltration Test Using a Weir

The crown of the pipe shall be covered with not less than two feet of water at the highest point in the section tested. The test head shall be maintained for not less than 24 hours before a weir measurement is made.

The infiltration should be measured by means of a V-notch weir located in the downstream manhole. All service connections and stubs shall be capped or plugged to prevent the entrance of ground water into the line at these connections.

12.7.3.2 Line Exfiltration Test

The inlet of the upstream and downstream manholes shall be closed with watertight bulkheads. Then the sewer and the upstream manhole shall be filled with water until the elevation of water in the upstream manhole is two feet higher than the top of the pipe in the line being tested, or two feet above the existing ground water in the trench, whichever is the higher elevation. The exfiltration will be measured by determining the amount of water required to maintain the initial water elevation for one hour from the start of the test. If the average head above the section being tested exceeds two feet, then allowable leakage can be increased by 5% for each additional foot of head. This test is

preferable for dry areas where ground water head over the pipe does not exist at the time of the test.

12.7.3.3 Line Low-Pressure Air Test

ASTM C828-76T, Low Pressure Air Test of Vitrified Clay Pipe Sewer Lines (4 to 12 in.), shall be utilized when air testing sewer pipe.

12.7.3.4 Manhole Exfiltration Test

The inlet and outlet of the manhole shall be plugged and the manhole filled to at least the depth that is used in testing the line. Allow the water to stand one hour and refill to the original elevation. After a specific time, usually 15 minutes to 1 hour, record the difference in elevation and convert into gallons per hour lost through manhole leakage.

To get actual line exfiltration subtract manhole loss from loss determined during line exfiltration test.

12.7.3.5 Exceptions

Replacement of existing sewers which have service connections may be exempted from the leakage testing requirements

12.7.4 Alignment Test

Sewers shall be checked for alignment by either using a laser beam or lamping. The light should be visible through the section of pipe lamped. The results of the alignment test shall be evaluated by the design engineer.

bkp/WQPI215P01.01 -.14

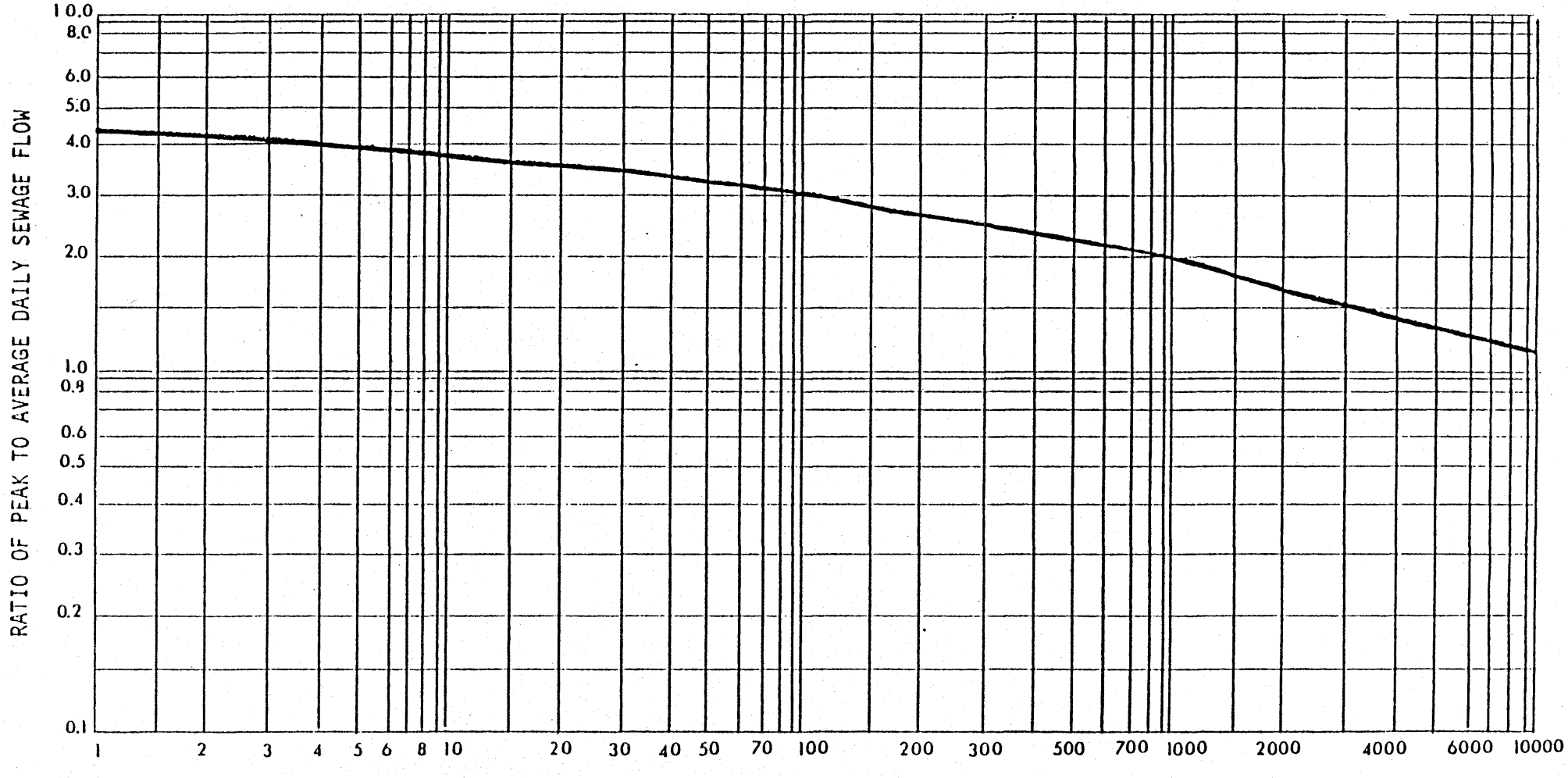

POPULATION, IN HUNDREDS

NOTE: Curve Source: Fair, G.M. and Geyer, J.C., "Water Supply and Waste-Water Disposal." 1st Ed., John Wiley & Sons, Inc., New York (1954)

Curve, $\frac{18 + \sqrt{P}}{4 + \sqrt{P}}$ (P = Population in Thousands)

Appendix I

IOWA WASTEWATER FACILITIES DESIGN STANDARDS

CHAPTER 13

WASTEWATER PUMPING STATIONS AND FORCE MAINS

13.11 EMERGENCY OPERATION

13.11.1 In-Place Equipment

13.11.1.1 Placement
13.11.1.2 Controls
13.11.1.3 Size
13.11.1.4 Engine Location

13.11.2 Portable Equipment

13.12 FORCE MAINS

13.12.1 Size

13.12.2 Velocity

13.12.3 Air Relief Valve

13.12.4 Termination

13.12.5 Materials of Construction

13.12.6 Pressure Tests

13.12.7 Special Construction

13.12.8 Protection of Water Supplies

13.12.9 Anchoring

13.12.10 Surge Protection

13.12.11 Design Friction Losses

13.12.12 Identification

IOWA WASTEWATER FACILITIES DESIGN STANDARDS

CHAPTER 13

WASTEWATER PUMPING STATIONS AND FORCE MAINS

13.1 GENERAL

13.1.1 Applicability

This chapter is applicable to construction, installation or modification of any disposal system reuqired to obtain a construction permit from this Department under the Iowa Code, Section 455B.45, and 900--64.2 of the Iowa Administrative Code (I.A.C.).

13.1.2 Variances [900--64.2(9)"c", I.A.C.]

When engineering justification satisfactory to the executive director is provided substantially demonstrating that variation from the design standards or siting criteria will result in either: at least equivalent effectiveness while significantly reducing costs, or improved effectiveness, such a variation from design stndards or siting criteria may be accepted by the executive director.

13.1.3 Explanation of Terms

The terms "shall" or "must" are used in these standards when it is required that the standard be used. Other terms such as "should" and "recommended" indicate desirable procedures or methods which should be considered but will not be required.

13.1.4 Scope of Standard

This chapter shall apply to all raw wastewater pumping stations, whether located out in the collection system or at the wastewater treatment works.

13.2 GENERAL REQUIREMENTS

13.2.1 Flood Protection

The station's electrical and mechanical equipment which would be permanently damaged by flooding shall be located at an elevation that is not subject to the 100-year flood or shall otherwise be adequately protected against damage from the 100-year flood. The station shall be designed to remain fully operational and accessible during the 25-year flood. In the absence of official records to establish 100-year and 25-year flood elevations, the best available local information shall be used.

13.2.2 Accessibility

Wastewater pumping stations shall be readily accessible by maintenance vehicles during all weather conditions.

13.2.3 Siting

Pumping statiosn shall be located as far as practical from present or proposed built-up residential areas and off the traffic way of streets and alleys. Noise control, odor control, station architectural design and other aesthetic items shall be taken into consideration. Sites for stations shall be of sufficient size for future expansion or addition, if applicable.

13.2.4 Safety

It is the facility owner's responsibility to ensure that the Occupational Safety and Health Administration (OSHA), the National Electrical Code and other applicable building and construction codes and requirements are met during construction and subsequent operation. During construction this requirement may be met by including references to OSHA, NEC and other applicable building and construction codes in the contract documents.

13.3 DESIGN

13.3.1 Type

Wastewater pumping stations may be of the wet well/dry well type, or may be of the type with suction lift pumps (Section 13.9) or submersible pumps (Section 13.10) as appropriate for the circumstances. Screw type pumps for low lift applications are also acceptable where appropriate.

13.3.2 Structures

13.3.2.1 Separation

Dry wells, including their superstructures, shall be separated from wet wells. Where common wall construction is proposed, both the liquid and gaseous contents of the wet well shall be completely sealed off from the dry well and any penetrations through the common wall shall be sealed.

13.3.2.2 Equipment Removal

Provisions shall be made to facilitate removal of pumps, motors, and other mechanical and electrical equipment.

13.3.2.3 Access and Fencing

Suitable and safe means of access shall be provided to dry wells and to wet wells containing screens, bar racks, or other mechanical equipment requiring inspection or maintenance.

Pumping stations shall be designed to discourage vandalism and the entrance of animals or unauthorized personnel. Fencing should be provided when appropriate.

13.3.2.4 Construction Materials

Materials shall be selected that are appropriate under conditions of exposure to hydrogen sulfide and other corrosive gases, greases, oils, and other constituents frequently present in wastewater.

13.3.2.5 Grit Protection

Where it may be necesary to pump wastewater prior to grit removal, the wet well and pumping station piping shall be designed to avoid operational problems from the accumulation of grit.

13.4 PUMPS AND PNEUMATIC EJECTORS

13.4.1 Pumping Rate and Number of Units

At least two pumps or pneumatic ejector pots (receivers) and compressors shall be provided, each capable of handling the expected PHWW flow.

When three or more units are provided, they must be of such capacity that with any one unit out of service, the remaining units will have capacity to handle the expected PHWW flow.

When the station is expected to operate at a flow rate less than 0.5 times the ADW flow for longer than 12 hours at a time, the design shall address measures taken to prevent septicity due to long holding times in the wet well.

Consideration shall be given to the use of variable-speed pumps, particularly when the pumping station delivers flow directly to a treatment plant, so that wastewater will be delivered at approximately the same rate as it is received at the pumping station.

13.4.2 Protection Against Clogging

All pumping stations handling raw wastewater shall have provisions for screening to protect the pumps from clogging or damage.

Trash baskets constructed of a corrosion resistant material and easily removable for cleaning may be used for small pumping stations.

Bar racks with clear openings not exceeding 2 1/2 inches shall be provided for larger stations.

Mechanically cleaned bar screens with manually cleaned bar rack bypasses shall be considered for very large installations.

Unless screenings can be collected at ground level, hoists shall be provided for removing screenings containers from facilities located below ground.

13.4.3 Pump Openings

Unless grinder pumps are used, pumps shall be capable of passing spheres at least 3 inches in diameter. Pump suction and discharge openings shall be at least 4 inches in diameter.

13.4.4 Priming

Pumps shall be so placed that under all operating conditions they will operate under a positive suction head (except for suction lift pumps).

13.4.5 Intakes

Each pump shall have individual intake piping. Wet well design shall be such as to avoid turbulence near the intake and to minimize air entrainment resulting from proximity of the flow entering the wet well and the pump intakes. Intake piping shall be as straight and short as possible and designed so as not to entrap air.

13.4.6 Reverse Rotation Protection

Consideration should be given to providing anti-reverse rotation ratchets to protect against runaway pumps on installations with high flows, high discharge heads, long force mains or combinations of these which could contribute to excessive backflows in the event of check valve failure.

13.4.7 Electrical Equipment and Controls

Electrical systems and components (e.g., motors, lights, cables, conduits, switchboxes, control circuits, etc.) in raw wastewater wet wells, or in enclosed or partially enclosed spaces where hazardous concentrations of flammable gases or vapors may be present, shall comply with the National Electrical Code requirements for Class 1 Group D, Division 1 locations (except for submersible pump motors). In addition, equipment located in the wet well shall be suitable for use under corrosive conditions. Each flexible cable (except for submersible pumps) shall be provided with a watertight seal and separate strain relief. A fused disconnect switch located above ground shall be provided for the main power feed for all pumping stations. When such equipment is exposed to weather, it shall meet the requirements of weatherproof equipment. Ground fault interruption (GFI) protection shall be provided for all outdoor outlets.

Sensing devices for level controls in wet wells shall be located to minimize the effects of turbulence from entering flows or pump suctions. Provisions shall be made to alternate the pumps in use.

13.4.8 Dry Well Dewatering

A separate sump pump shall be provided in the dry well to remove leakage or drainage, with the discharge equipped with dual check valves or located above the maximum liquid level in the wet well.

All floor and walkway surfaces shall have an adequate slope to a point of drainage. Pump seal water shall not be permitted to discharge on the floor of the pumping station.

13.5 PIPING AND VALVES

13.5.1 Pipe Size

Pump suction and discharge piping shall not be less than four inches in diameter except where design of specialized equipment allows. Maximum recommended velocities are six feet per second in the suction line and eight feet per second in the discharge line. Minimum velocity shall not be less than two feet per second in the discharge line.

13.5.2 Valves

13.5.1 Suction Line

Suitable shutoff valves shall be placed on the suction line of each pump except on submersible, suction lift and screw pumps.

13.5.2 Discharge line

Suitable shutoff and check valves shall be placed on the discharge line of each pump (except on screw pumps). The check valve shall be located between the shutoff valve and the pump. Check valves shall be suitable for the material being handled and shall be placed on the horizontal portion of discharge piping except for ball checks, which may be placed in the vertical run. Valves shall be capable of withstanding normal pressure and water hammer.

All shutoff and check valves shall be operable from the floor level and accessible for maintenance. Outside levers are recommended on swing check valves.

Where limited pump backspin will not damage the pump and low discharge head conditions exist, short individual force mains for each pump may be considered in lieu of discharge valves.

Suitable provisions shall be made on installations using screw pumps to prevent backflow down the trough of a pump that is out of service.

13.6 WET WELLS

13.6.1 Wet Well Size

The wet well size and control setting shall be appropriate to avoid heat buildup in the pump motor due to frequent starting. To avoid septic conditions due to excessive detention time, the effective capacity of the wet well should provide a holding period not to exceed ten minutes for the MWW flow.

13.6.2 Floor Slope

The wet well fillets shall have a minimum slope of one to one to the hopper bottom. The horizontal area of the hopper bottom shall be kept as small as possible while providing for proper installation and function of the inlet.

13.7 VENTILATION

Adequate ventilation shall be provided for all pumping stations. Where the dry well is below the ground surface, mechanical ventilation is required. The wet well shall be independently ventilated if screens or mechanical equipment requiring maintenance or inspection are located in the wet well. There shall be no interconnection between the wet well and dry well ventilation systems. Multiple inlets and outlets for ventilation are desirable for large installations. Thottling dampers shall not be used on exhaust or fresh air ducts and fine screens or other obstructions in air ducts should be avoided to prevent clogging. Switches for operation of ventilation equipment shall be marked and located conveniently. All intermittently operated ventilating equipment shall be interconnected with the respective wet well or dry well lighting system. Consideration shall be given to automatic controls where intermittent operation is used. The fan wheel shall be fabricated from non-sparking material. Consideration shall be given to installation of automatic heating and/or dehumidification equipment.

13.7.1 Wet Wells

Ventilation may be either continuous or intermittent. Ventilation, if continuous, shall provide at least 12 complete air changes per hour; if intermittent, at least 30 complete air changes per hour. Air shall be forced into the wet well rather than exhausted from it. Submersible pump wet wells shall be provided with static vents if mechanical ventilation is not provided.

13.7.2 Dry Wells

Ventilation may be either continuous or intermittnet. Ventilation, if continuous, shall provide at least 6 complete air changes per hour; if intermittent, at least 30 complete air changes per hour. This requirement does not apply to the upper or grade level operating room of a wet well/dry well type pumping station.

13.8 SPECIAL DETAILS

13.8.1 Flow Measurement

Elapsed time meters shall be installed on all pumps unless otherwise approved by the Department. Pumping stations with an AWW flow capacity of 1.0 million gallons per day or more shall be equipped with flow metering equipment or event recorders in addition to elapsed time meters.

13.8.2 Water Supply

There shall be no physical connection between any potable water supply and a wastewater pumping station which under any conditions might cause contamination of the potable water supply. If a potable water supply is brought to the station, it shall comply with conditions stipulated under Section 14.7.1 of these standards.

13.8.3 Alarm Systems

Alarm systems shall be provided for pumping stations. The alarm shall be activated in cases of power failure, pump failure, high water level or any cause of pumping station malfunction. Pumping station alarms shall be transmitted to a municipal facility that is manned 24 hours a day. If such a facility is not available, the alarm shall be transmitted to city offices during normal working hours and to the home of the person(s) in responsible charge of the pumping station during off-duty hours. Audio-visual alarm systems with a self-contained power supply may be acceptable in some cases in lieu of the transmitting system outlined above, depending upon location, station holding capacity and inspection frequency.

13.8.4 Lighting

Adequate lighting shall be provided for the pumping station. If the wet well is lighted, explosion proof fixtures shall be provided.

13.9 SUCTION LIFT PUMPS

Suction lift pumps shall be of the vacuum-priming or self-priming type. All suction lift pumps shall meet the applicable reuirements set forth in Sections 13.3 and 13.4 of these standards. The maximum lift for suction lift pumps shall not exceed 15 feet. Higher lifts may be permitted if detailed calculations are submitted indicating satisfactory pump performance under the proposed operating conditions. Such detailed calculations must include static suction lift as measured from "lead pump off" elevation to center line of pump section, friction and other hydraulic losses of the suction piping, vapor pressure of the liquid, altitude correction, required net positive suction head, and a safety factor of at least 6 feet. Under no conditions shall the combined total of dynamic suction lift at the "lead pump off" elevation and required net positive suction head (NPSH) at design operating conditions exceed 22 feet.

The pump equipment compartment shall be above grade or offset and shall be effectively isolated from the wet well to prevent the humid and corrosive sewer atmosphere from entering the equipment compartment. Wet well access shall not be through the equipment compartment. Valving shall not be located in the wet well.

13.9.1 Self-Priming Pumps

Self-priming pumps shall be capable of rapid priming and repriming at the "lead pump on" elevation. Such self-priming and repriming shall be accomplished automatically under design operating conditions. Suction piping shall not exceed the size of the pump suction and shall not exceed 25 feet in total length.

13.9.2 Vacuum-Priming Pumps

Vacuum-priming pumping stations shall be equipped with dual vacuum pumps capable of automatically and completely removing air from the suction lift pump. The vacuum pumps shall be adequately protected from damage due to wastewater.

13.10 SUBMERSIBLE PUMPS

Submersible pumping stations shall meet all applicable requirements under Sections 13.3 and 13.4.

13.10.1 Construction

Submersible pumps and motors shall be designed specifically for wastewater use, including totally submerged operation during a portion of each pumping cycle. An effective method to detect shaft seal failure or potential seal failure shall be provided, and the motor shall be of the type without brushes or other arc-producing mechanisms.

13.10.2 Pump Removal

Submersible pumps shall be readily removable and replaceable without dewatering the wet well or disconnecting any piping in the wet well.

13.10.3 Electrical

13.10.3.1 Power Supply and Control

Electrical supply, control and alarm circuits shall be designed to provide strain relief and to allow disconnection from outside the wet well. Terminals and connectors shall be protected from corrosion by location outside the wet well or through use of watertight seals. If located outside, weatherproof equipment shall be used.

13.10.3.2 Control Center

The motor control center shall be located outside the wet well and be protected by a conduit seal or other appropriate measures meeting the requirements of the National Electrical Code, to prevent the atmosphere of the wet well from gaining access to the control center. The seal shall be so located that the motor may be removed and electrically disconnected without disturbing the seal.

13.10.3.3 Power Cord

Pump motor power cords shall be designed for flexibility and serviceability under conditions of extra hard usage. Ground fault interruption (GFI) protection shall be used to de-energize the circuit in the event of any failure in the electrical integrity of the cable.

13.10.4 Valves

Valves for submersible pumps required under Section 13.5 shall be located in a separate valve chamber. Accumulated water shall be drained to the wet well. An effective method shall be provided to prevent wastewater and gas from entering the valve chamber.

13.11 EMERGENCY OPERATION

Pumping stations and collection systems shall be designed to prevent or minimize bypassing of wastewater. For use during possible periods of extensive power outages, mandatory power reductions, or uncontrolled storm events, an emergency means of operation shall be provided, such as a second, independent power source connected to the station, an engine-driven generator, engine-driven standby pumps or portable pumps or portable generator. The standby facilities must be capable of being placed in operation at the site within 30 minutes of the onset of the emergency condition (preferably before the liquid level in the wet well rises to the overflow level).

Engine-driven pumps must meet all applicable requirements in Section 13.4 of these standards. Provisions for backup power sources must comply with the requirements of Section 14.5.3 of these standards.

In addition to the required emergency means of operation, where overflows affect public water supplies, a high level wet well overflow and a storage/detention basin, or tank, shall be provided having 2-hour detention capacity at the anticipated overflow rate. Storage/detention tanks, or basins, shall be designed to drain by gravity or pumping to the station wet well.

Consideration should be given to providing a high level wet well overflow to suppplement alarm systems and required standby facilities in order to prevent backup of wastewater into basements, or other discharges which may cause severe adverse impacts on public interests, including public health and property damage.

13.11.1 In-Place Equipment

Where in-place internal combustion equipment is utilized, the following guidelines must be followed.

13.11.1.1 Placement

The unit shall be bolted in place. Facilities shall be provided for unit removal for purposes of major repair or routine maintenance.

13.11.1.2 Controls

Consideration shall be given to provisions for automatic and manual startup and cut-in.

13.11.1.3 Size

Unit size shall be adequate to provide power for lighting and ventilating systems in addition to pumping requirements.

13.11.1.4 Engine Location

The unit internal combustion engine shall be located at or above grade, with suitable and adequate provisions for heat dissipation and ventilation of exhaust gases.

13.11.2 Portable Equipment

Where portable equipment is utilized, the following guidelines must be followed:

Pumping units shall have capability to operate between the wet well and the discharge side of the station, and the station shall be provided with permanent fixtures that will facilitate rapid and easy connection of lines. Electrical energy generating units shall be protected against burnout when normal utility services are restored, and shall have sufficient capacity to provide power for lighting and ventilating systems in addition to the pumping units.

13.12 FORCE MAINS

13.12.1 Size

Minimum size force mains shall be not less than 4 inches in diameter, except for grinder pumps or other specialized applications.

13.12.2 Velocity

The minimum self-scouring velocity shall not be less than two feet per second. Recommended maximum velocity is eight feet per second.

13.12.3 Air Relief Valve

An air relief valve shall be placed at high points in the force main to relieve air locking.

13.12.4 Termination

The force main shall enter the receiving manhole with an invert elevation that will ensure a smooth flow transition to the gravity flow section; but in no case shall the force main enter the gravity sewer system at a point more than 1 foot above the flow line of the receiving manhole. The design shall minimize turbulence and scouring at the point of discharge.

Consideration shall be given to the use of inert materials or protective coatings for the receiving manhole to prevent deterioration as a result of exposure to hydrogen sulfide or other chemicals where such chemicals are present or suspected to be present because of industrial discharges or long force mains.

13.12.5 Materials of Construction

The pipe material shall be adapted to local conditions, such as character of industrial wastes, soil characteristics, exceptionally heavy external loadings, internal erosion, corrosion, and similar problems.

Installation specifications shall contain appropriate requirements based on the criteria, standards, and requirements established by the industry in its technical publications. Requirements shall be set forth in the specifications for the pipe and methods of bedding and backfilling thereof so as not to damage the pipe or its joints nor impede cleaning operations, nor to create excessive side fill pressures, nor to seriously impair flow capacity.

All pipes shall be designed to prevent damage from superimposed loads. Proper allowance for loads on the pipe shall be made because of the width and depth of trench.

13.12.6 Pressure Tests

All force mains shall be tested at a minimum pressure of at least 50 percent above the design operating pressure for at least 30 minutes at the low point in the line. Leakage shall not exceed the amount given by the following formula:

$$L = \frac{SD\sqrt{P}}{133,200}$$

Where L is allowable leakage in gallons per hour,
S is the length of pipe in feet,
D is the pipe diameter in inches, and
P is the test pressure in pounds per square inch.

13.12.7 Special Construction

Force main construction near streams or used for aerial crossings shall meet the requirements of Sections 12.5.11 and 12.5.12 of these standards.

13.12.8 Protection of Water Supplies

Force main construction shall comply with all applicable requirements of Section 12.5.8 of these standards for the protection of public and private water supplies.

13.12.9 Anchoring

Force mains shall be sufficiently anchored within the pumping station and throughout the line length. The number of bends

shall be as few as possible. Thrust blocks, restrained joints, and/or tie rods shall be provided where restraint is needed.

13.12.10 Surge Protection

Consideration shall be given to the use of surge anticipation valves, surge tanks, or other suitable means to protect the force main against severe pressure changes due to the starting or stopping of large capacity pumps particularly when such pumps are required to run against high discharge heads.

13.12.11 Design Friction Losses

Friction losses through force mains shall be based on the Hazen and Williams formula or other acceptable method. When the Hazen and Williams formula is used, the following values for "C" shall be used for design.

Unlined iron or steel - 100
All other materials - 120

When initially installed, force mains will have a significantly higher "C" factor than shown, which should be used in designing for the discharge forces at receiving or splitting structures at the discharge end of force mains and in calculating maximum power requirements.

13.12.12 Identification

Where force mains are constructed of material which might cause the force main to be confused with potable water mains, the force mains shall be appropriately identified.

Adopted March 22, 1984
Amended May 20, 1987

WASTEWATER FACILITIES DESIGN STANDARDS

CHAPTER 14

WASTEWATER TREATMENT WORKS

IOWA WASTEWATER FACILITIES DESIGN STANDARDS

CHAPTER 14

WASTEWATER TREATMENT WORKS

14.1 GENERAL

14.1.1 Applicability

This chapter is applicable to construction, installation or modification of any disposal system required to obtain a construction permit from this Department under the Iowa Code, Section 455B.45, and 567--64.2 of the Iowa Administrative Code (I.A.C.).

14.1.2 Variances [567--64.2(9)"c", I.A.C.]

When engineering justification satisfactory to the executive director is provided substantially demonstrating that variation from the design standards or siting criteria will result in either: at least equivalent effectiveness while significantly reducing cost, or improved effectiveness, such a variation from design standards or siting criteria may be accepted by the executive director.

14.1.3 Explanation of Terms

The terms "shall" or "must" are used in these standards when it is required that the standard be used. Other terms such as "should" and "recommended" indicate desirable procedures or methods which should be considered but will not be required.

14.2 PLANT SITING

14.2.1 General

The engineering report or facilities plan required by Chapter 11 of these Standards shall address site selection. All sites must comply with all applicable siting requirements of this Department and other state and local agencies.

14.2.2 Site Survey [567--60.4(1)"c" I.A.C.]

The applicant's engineer must submit the following information for a site survey.

- Engineering Report or Facilities
- Construction Permit Application Forms, WAWM 28:

    - Schedule A - General Information
    - Schedule F - Treatment Project Site Selection
    - Schedule G - Treatment Project Design Data

14.2.3 Separation Requirements [567--64.2(3) I.A.C.]

The following separation distances from treatment or lagoon water surface shall apply:

a. 1,000 feet from the nearest inhabitable residence, commercial building, or other inhabitable structure. If the inhabitable or commercial building is the property of the owner of the proposed treatment facility, or there is written agreement with the owner of the building, the separation criteria shall not apply. Any such agreement shall be filed with the county recorder and recorded for abstract of title purposes, and a copy submitted to the Department.

b. 1,000 feet from public shallow wells.

c. 400 feet from public deep wells.

d. 400 feet from private wells.

e. 400 feet from lakes and public impoundments.

f. 25 feet from property lines and right-of-way.

When the above separation distances cannot be maintained for the expansion, upgrading or replacement of existing facilities, the separation distances shall be maintained at no less than 90% of the existing separation distance of the site, provided that no problem has existed or will be created.

14.2.4 Flood Protection

a. The treatment works structures, electrical and mechanical equipment shall be protected from physical damage by the one hundred (100) year flood. Treatment works shall remain fully operational and accessible during the twenty-five (25) year flood, if practicable; lesser flood levels may be permitted dependent on local situations, but in no case shall less than a ten (10) year flood be used. This applies to new construction and should be considered for existing facilities undergoing major modification.

b. Wastewater treatment facilities shall not be located to conflict with encroachment limits on the floodway. The establishment of these encroachment limits is described in rules 72.6 and 75.4.

c. It is also recommended that structures be offset one hundred feet or twice the width of the river or stream measured from top of bank to top of bank, whichever distance is less, unless a greater distance is required under 72.6 and 75.4.

14.3 QUALITY OF EFFLUENT

This Department establishes the effluent limitations for each wastewater discharger. Effluent limitations for existing wastewater dischargers are available from the Department. The effluent limitations for new dischargers or significantly modified dischargers are established by the Department upon request. The minimum degree of treatment shall be standard secondary treatment for municipal facilities and the industrial effluent guidelines as defined by Department rules and Federal regulations for industrial facilities. A higher degree of treatment will be required if the minimum degree of treatment requirements would violate state water quality standards. Design engineers must obtain effluent limitations prior to preparation of the engineering report or facilities plan. The facilities must be designed to meet average effluent limitations in the operation permit during any 30-day period and to not exceed maximum seven-day average effluent limitations.

14.4 DESIGN

14.4.1 General

14.4.1.1 Type of Treatment

Careful consideration shall be given to the type of treatment selected in the engineering report or facilities plan as required by Section 11.2.9.5.

14.4.1.2 Industrial Wastes

Consideration shall be given to the type and effects of industrial wastes on the treatment process. It may be necessary to pretreat industrial wastes prior to discharge to the sanitary sewer system.

14.4.1.3 Prohibited Wastes

The following wastes shall not be discharged to treatment facilities without assessment of their effects upon the treatment process or discharge requirements in accordance with state and federal law:

a. Any toxic chemicals which may inhibit biological or bacteriological processes.

b. Any strong oxidizing agents or disinfectants in quantities sufficient to inhibit the growth of microorganisms.

c. Metal plating wastes or other toxic wastes containing heavy metals and/or toxic or noxious inorganic chemicals, such as cyanide, reduced sulfur compounds, arsenic and selenium

d. Detergent wastes or other wastes containing excessive phosphorous or surfactants.

e. Plastics, pharmaceutical wastes and/or other synthetic organic chemicals not amendable to biological treatment.

f. Any wastes containing excessive amounts of nonbiodegradable oil and grease or tar.

g. Any acidic or alkaline wastes which because of quantity, strength or unequalized flow may upset the biological process.

h. Any wastes containing in excess of one milligram per liter phenols.

i. Any wastes containing radioactive chemicals.

j. Nutrient deficient wastes which cannot meet the normal ratio of 100 BOD_5: 5 Nitrogen: 1 Phosphorous necessary for the maintenance of the biological community. An example would be corn processing wastes.

k. Any wastes that might cause excessive physical deterioration of the equipment, piping or structures.

l. Any other waste which may be defined as an incompatible pollutant.

14.4.2 Pre-Design Meeting

It is recommended that for treatment works projects a pre-design meeting be held, with the applicant, design engineer, and the Department being in attendance. The purposes of this meeting would include:

- discussion of changes subsequent to engineering report or facilities plan approval,
- deviations from design standards,
- schedule of submittal and review, and
- facility reliability requirements determination.

14.4.3 Required Engineering Data for New Process Evaluation

The policy of the Department is to encourage rather than obstruct the development of any new methods or equipment for treatment of wastewater. The lack of inclusion in the design standards of some types of wastewater treatment processes or equipment should not be construed as precluding their use. The Department may approve other types of wastewater treatment processes and equipment under the condition that the operational reliability and effectiveness of the process or device shall have been demonstrated with a suitably-sized prototype unit operating at its design load conditions. The specific information required by the Department to demonstrate operational reliability and effectiveness will depend upon the process or device under consideration. Information which may be required include:

a. Monitoring observations, including test results and engineering evaluations, demonstrating the efficiency of such processes.

b. Detailed description of the test methods.

c. Testing, including appropriately-composited samples, under various ranges of strength and flow rates (including diurnal variations) and waste temperatures over a sufficient length of time to demonstrate performance under climatic and other conditions which may be encountered in the area of the proposed installations.

d. Other appropriate information.

The Department may require that appropriate testing be conducted and evaluations be made under the supervision of a competent process engineer other than the one employed by the manufacturer or patent holder.

14.4.4 Design Period

14.4.4.1 General

The design period shall be clearly identified in the engineering report or facilities plan. The normal design period for municipal wastewater facilities is 20 years beyond the date of completion of construction. Use of a shorter design period must be justified and a schedule of action submitted which identifies future improvements to avoid effluent quality violations caused by growth.

Industrial facilities shall, as a minimum, be sized to adequately treat wastewater produced during the maximum projected production period.

14.4.5 Hydraulic Design

14.4.5.1 Critical Flow Conditions, Municipal

The following four flow conditions are critical to the design of the treatment plant:

a. Average Dry Weather (ADW) flow - the daily average flow when the groundwater is at or near normal and runoff is not occurring. The period of measurement for this flow should extend for as long as favorable conditions exist up to 30 days if possible.

b. Average Wet Weather (AWW) flow - The daily average flow for the wettest thirty (30) consecutive days for mechanical plants or for the wettest 180 consecutive days for controlled discharge lagoons.

c. Maximum Wet Weather (MWW) flow - the total maximum flow received during any 24 hour period when the groundwater is high and runoff is occurring.

d. Peak Hourly Wet Weather (PHWW) flow - the total maximum flow received during one hour when the groundwater is high, runoff is occurring, and the domestic, commercial and industrial flows are at their peak. The domestic/commercial peak hour flow shall be based on actual monitoring information or the use of a peaking factor determined by use of Appendix I, Chapter 12 of these Standards. The runoff flow component shall be adjusted to the storm event of two inches of rainfall in one hour.

   The peak hourly wet weather flow shall be used to evaluate the effect of hydraulic peaks on the design of pumps, piping, clarifiers, and any other flow sensitive aspects.

   Initial low flow conditions must be evaluated in the design to minimize operation problems with freezing, septicity, flow measurements and solids dropout.

14.4.5.2 Existing System, Municipal

Where there is an existing system, the volume and strength of existing flows shall be determined. The flow determination shall include, but not be limited to, all four (4) flow conditions listed in subsection 14.4.5.1. The strength determination

shall include both dry weather and wet weather conditions. Composite 24 hour samples proportional to flow shall be taken to be accurately representative of the strength of the wastewater. At least one-year's flow data should be taken as the basis for the preparation of hydrographs for analysis to determine the flow conditions of the system. The increment of design flow for projected population growth shall be based upon the same criteria listed below for new systems.

14.4.5.3 New Systems, Municipal

The design for wastewater treatment plants to serve new collection systems shall be based on an average wet weather flow of 100 gallons per capita per day for residential and commercial flow plus 20 gallons per capita per day for out-of-town students plus industrial flow plus any abnormally large commercial operation (e.g., shopping centers, large volume restaurants, truck stops, etc.). Exceptions may be made on a case-by-case basis where there is an existing water supply with adequate available water use data or data from similar existing wastewater systems may be utilized for those new collection systems where a water supply does not exist. However, in such cases, thorough investigation and adequate documentation shall be made to establish the reliability and applicability of such data.

14.4.5.4 Critical Flow Conditions, Industrial

Flow and loads from industrial sources may vary significantly during a day, a week or a month due to production patterns. In designing the facility, the flow rate which occurs during the time period of discharge must be considered. This flow rate is defined as the rated flow.

The following flow conditions must be considered in the design of the treatment facility:

a. Average Rated Flow (30-Day) - The average rated flow which is expected to occur during production days in a 30 consecutive day period.

b. Maximum Day Rated Flow - The maximum rated flow expected to occur during a single 24-hour period.

c. Peak Hour Flow - The maximum flow which is expected to occur during a one hour period.

Other flows must be considered when they are critical to the sizing and operation of the treatment process. When determining the critical flow conditions, the following components shall be considered, as a minimum.

- Production Flows - for existing facilities, a minimum of one year of flow data shall be used for determining critical flows. This data shall be correlated with production data. For new facilities, the design flows shall be based on similar operating facilities, proposed operation mode, federal development documents for effluent limitations and new source performance data.

- Sanitary Flows - A minimum of 10 gallons per worker per shift per day shall be utilized. Higher values with suitable documentation shall be used if shower and cafeteria facilities are present.

- Contaminated Storm Runoff - If direct treatment of contaminated storm runoff is to be included, these flows shall be estimated using a rational method.

The treatment plant must be designed to meet the effluent limitations discussed in Section 14.3. The peak hourly flows must be considered in evaluating unit processes, pumping, piping, etc.

Initial low flow conditions must be evaluated in the design to minimize operational problems with freezing, septicity, flow measurements and solids dropout.

14.4.5.5 Flow Equalization

Facilities for the equalization of flows and organic shock load shall be considered when the ratio of peak hourly wet weather flow to average wet weather flow is three (3) or more. If flow equalization is not employed under these circumstances, an explanation must be included, outlining how the plant will handle this transition from average wet weather design flow to peak hourly wet weather design flow.

14.4.6 Organic Design

14.4.6.1 Domestic Loadings

When an existing treatment work is to be upgraded or expanded, the organic design shall be based upon

the actual strength of the wastewater as determined from the measurements taken in accordance with Section 14.4.5.2, with an increment for growth. This growth increment shall be based on the design criteria for new systems stated below. A loading rate of 0.17 pounds BOD per capita per day may be used in lieu of actual loading rates whenever such loading rates are less than 0.17 pounds BOD per capita per day.

Domestic waste treatment design to serve new collection systems shall be on the basis of at least 0.17 pounds of BOD per capita per day and 0.20 pounds of suspended solids per capita per day plus 0.05 pounds of BOD and suspended solids per out-of-town student per day.

When garbage grinders are used in areas tributary to a domestic treatment plant, the design basis should be increased to 0.22 pounds of BOD per capita per day and 0.25 pounds of suspended solids per capita per day.

Domestic waste treatment plants that will receive industrial wastewater flows shall be designed with additional capacity for these industrial wasteloads.

14.4.6.2 Industrial Loadings

The design loadings of industrial wastewater treatment works shall be based on actual sampling in accordance with Section 14.4.5.4, data from similar industrial facilities, or federal development documents for effluent limitation guidelines and new source performance requirements.

The treatment facility must be designed to meet the effluent limitations discussed in Section 14.3. In addition, diurnal peaks of organic loads must be addressed if such peaks adversely affect a unit process.

14.4.7 Conduits

All piping and channels shall be designed to carry the maximum expected flows into these conduits or channels without flooding. Bottom corners of the channels, except final effluent channels, must be filleted. Conduits shall be designed to avoid creation of pockets and corners where solids can accumulate. The use of shear gates, stop plates or stop planks is permitted where they can be used in place of gate valves or sluice gates. Corrosion resistant materials shall be used for valves, plates and gates. Pipes subject to

clogging shall be provided with means for mechanical cleaning and flushing.

14.4.8 Design Details

14.4.8.1 Unit Bypass During Construction

Final plan documents shall identify or require a construction sequence for uninterrupted operation of the existing plant during construction so as to minimize temporary water quality degradation.

14.4.8.2 Drains

A means shall be provided to dewater each unit in the process. This shall be accomplished by means of gravity drains or pumping. The drainage must receive a degree of treatment which will allow for discharge in compliance with the facilities' permit limitation. Suitable methods shall be included in the design to prevent flotation of structures in areas subject to high groundwater.

14.4.8.3 Pipe Identification

In order to facilitate identification of piping, it is required that process piping be clearly identified by labeling or color coding. Appendix I presents a recommended color scheme for purposes of standardization.

14.4.8.4 Operating Equipment

A complete outfit of tools, accessories, and spare parts necessary for the plant operator's use should be provided. Readily-accessible storage space and workbench facilities should be provided in non-lagoon facilities.

14.4.8.5 Erosion Control During Construction

Effective site erosion and sediment control shall be provided during construction. All temporary erosion and sediment control measures shall be removed or replaced with permanent measures after construction.

14.4.8.6 Grading and Landscaping

Upon completion of plant construction, the ground shall be graded and seeded or sodded. Surface water shall not be permitted to drain into any unit.

14.4.9 Plan Operability

14.4.9.1 Unit Operation Bypassing

Bypassing shall be provided around each unit operation, except as follows. Unit operations with two or more units and involving open basins shall not be required to have provisions for bypassing if the peak wastewater flow can be handled hydraulically with the largest unit out of service. The comminution facility shall be provided with means for gravity bypassing regardless of the number and flow capacity of the comminutors.

The actuation of all bypasses shall require manual action by operating personnel. All power actuated bypasses shall be designed to permit manual operation in the event of power failure and shall be designed so that the valve will fail as is, upon failure of the power operator.

A fixed high water level bypass overflow should be provided in addition to a manually or power actuated bypass to prevent flooding in case the operator bypass fails to function or is unattended at times.

14.4.9.2 Flexibility

Where duplicate units are provided, a central collection and distribution point including proportional flow splitting shall be provided for the wastewater flows before each unit operation. Exceptions to this requirement may be made, on a case-by-case basis, when the design incorporates more than one unit process in the same physical structure.

14.4.9.3 Flow Division Control

Flow division control facilities shall be provided as necessary to insure positive, adjustable control of organic and hydraulic loading to the individual process units and shall be designed for easy operator access, change, observation, and maintenance. Where duplicate units are provided, a flow division control facility shall be designed to properly proportion flow to each unit operation so that proportioned flows are measurable.

14.5 TREATMENT FACILITY RELIABILITY CLASSES

14.5.1 Facility Reliability Classes

The Department will establish reliability classes for all new facilities and facilities undergoing major modifications in accordance with one of the following classes:

a. Reliability Class I - Includes all facilities which discharge into navigable waters that could be permanently or unacceptably damaged by effluent which was degraded in quality for a few hours. This would include those facilities discharging into high quality waters, or into waters to be protected for primary contact water uses or raw water sources for a potable water supply (Classes A, B-cold water and C, Chapter 61, Water Quality Standards).

b. Reliability Class II - Includes all facilities where a reduction in effluent quality for several days would cause a violation of the water quality standards of the receiving body of water (Class B - warm water, Chapter 61, Water Quality Standards).

c. Reliability Class III - Includes all facilities which are not included in Reliability Classes I or II. This would include facilities which discharge into unclassified streams, controlled discharge lagoons, and treatment prior to land application.

14.5.2 Unit Process Reliability Criteria

The requirements for system reliability are normally achieved by providing duplicate or multiple units for each treatment process, but reliability can also be achieved through flexibility in the design and operation of systems and components. As used in these criteria, a unit operation is a single physical, chemical or biological process.

14.5.2.1 Unit Process Reliability Criteria A

The following reliability is required for any mechanical treatment facility that is Facility Reliability Class II or III, and is required to provide secondary treatment. (Facilities with Reliability Class I are covered by Unit Process Reliability Criteria B under 14.5.2.2 or Reliability Criteria C under 14.5.2.3.)

1. Duplication of major treatment units is not required. If provided, duplication for any unit process or operation shall, as a minimum, be in accordance with the appropriate part of Process Reliability Criteria B.

2. When duplicate units are not provided, the facility shall include a pond having five (5) days storage capacity for the average wet weather flow and with the capability to bypass the pond when effluent limitations are being met. This pond may also be used for flow equalization. Provisions for returning the holding pond contents to the treatment process are required.

   The pond shall be constructed in accordance with the applicable provisions of Section 18C.7, particularly Section 18C.7.3 pertaining to sealing of the pond bottom and maximum percolation rate. Separate volumes must be provided in the pond for the five (5) days storage capacity for the average wet weather flow and for flow equalization if it is planned to use the pond for both purposes. A minimum water level of two (2) feet shall be maintained at all times. Adequate provisions must be made for the necessary valving, piping, pumping, metering, aeration and sludge removal capabilities to permit the pond to be maintained and operated in a manner to effectively perform its intended functions.

3. Sludge wasting, sludge stabilization (defined by process) and holding, and a final disposal site are required.

14.5.2.2 Unit Process Reliability Criteria B

The following reliability is required for any mechanical treatment facility providing either standard secondary treatment with no nitrification requirement and is not exempted by Process Reliability Criteria A or two stage nitrification:

1. If primary screens are used, duplication shall be provided in accordance with the following:

   There shall be a sufficient number of units of a size such that, with the largest flow capacity unit out of service, the remaining units shall have a peak flow capacity of at least 100% of the PHWW flow (or industrial peak hour flow) to that unit operation.

2. Duplication of all primary clarifiers (if used), aeration basins, and fixed film reactors shall be provided in accordance with the following:

There shall be a sufficient number of units of a size such that, with the largest unit out of service, the remaining units shall have a design load capacity of at least 50% of the total design loading to that unit operation.

3. Duplication of all final clarifiers shall be provided in accordance with the following:

   There shall be a sufficient number of units of a size such that with the largest unit out of service, the remaining units shall have a design load capacity of at least 75% of the total design loading to that unit operation for Facility Reliability Class I and 50% for Facility Reliability Class II or III.

4. Sludge wasting, sludge stabilization (defined by process) and holding, and a final disposal site are required.

14.5.2.3 Unit Process Reliability Criteria C

The following reliability is required for any mechanical treatment facility providing single stage combined carbonaceous oxidation and nitrification:

1. If screens are used in lieu of primary clarifiers, duplication shall be provided in accordance with the following:

   There shall be a sufficient number of units of a size such that, with the largest flow capacity unit out of service, the remaining units shall have a peak flow capacity of at least 100% of the PHWW flow (or industrial peak hour flow) to that unit operation.

2. If primary clarifiers are used, duplication shall be provided in accordance with the following:

   There shall be a sufficient number of units of a size such that, with the largest unit out of service, the remaining units shall have a design load capacity of at least 50% of the total design loading to that unit operation.

3. Duplication of fixed film reactors and aeration basins shall be provided in accordance with the following:

There shall be a sufficient number of units of a size such that, with the largest unit out of service, the remaining units shall have a design load capacity of at least 50% of the total design loading to that unit operation.

4. Duplication of final clarifiers shall be provided in accordance with the following:

   There shall be a sufficient number of units of a size such that, with the largest unit out of service, the remaining units shall have a design load capacity of at least 75% of the total design loading to that unit operation.

5. Sludge wasting, sludge stabilization defined by process) and holding, and a final disposal site are required.

14.5.2.4 Unit Process Reliability Exceptions

A. An exception to the preceeding reliability requirements will be made in the upgrading of an existing plant which contains one unit large enough to provide at least 100% of the total design load capacity to that unit operation. In this case no duplication is required.

B. Another exception will be made in the upgrading of an existing unit to be operated in parallel with a larger new unit. In order to consider the use of the existing unit, it must provide at least 40% of the total design load capacity of that unit operation.

14.5.3 Power Source Reliability

Two separate and independent sources of electric power shall be provided to the facilities from either two separate utility substations or from a single substation and an emergency power generator. If available from the electric utility, at least one of the facility's power sources shall be a preferred source (i.e., a utility source which is one of the last to lose power from the utility grid due to loss of power generating capacity). In areas where it is projected that sometime during the design period of the facility, the electric utility may reduce the rated line voltage (i.e., "brown out") during peak utility system load demands, an emergency power generator shall be provided as an alternate power source. As a minimum, the capacity of the backup power source for each Facility Reliability Class shall be:

14.5.3.1 Facility Reliability Class I

Sufficient to operate all vital components, during peak wastewater flow conditions, together with critical lighting and ventilation. Vital components include those associated with flow, treatment, pumping, metering and disinfection, and those parts of sludge handling which cannot be delayed without adverse effects on plant performance. Critical lighting and ventilation is that needed to maintain safety and perform duties associated with operation of the vital components of the plant.

14.5.3.2 Facility Reliability Class II

Same as Reliability Class I, except that vital components used to support the secondary processes (i.e., mechanical aerators or aeration basin air compressors) need not be included as long as sedimentation and disinfection are provided.

14.5.3.3 Facility Reliability Class III

Sufficient to operate the screening or comminution facilities, the main wastewater pumps, the primary sedimentation basins, and the disinfection facility during peak wastewater flow condition, together with critical lighting and ventilation.

Notes:

- This requirement concerning rated capacity of electric power sources is not intended to prohibit other forms of emergency power, such as diesel driven main wastewater pumps.

- In cases where history of a long-term (four hours or more) power outages have occurred, backup power for providing minimum aeration of an activated sludge system will be required.

- Lagoon systems, including aerated lagoons, will be required to provide backup power for pumping and essential lighting and ventilation. Backup power for disinfection at aerated lagoon facilities is not required if no other component at the site requires backup power.

14.6 PLANT OUTFALL

14.6.1 Protection and Maintenance

The outfall sewer shall be so constructed and protected against the effects of floodwater, ice, or other hazards as to reasonably insure its structural stability and freedom from stoppage.

14.6.2 Sampling Provisions

All outfalls shall be designed so that a sample of the effluent can be obtained at a point after the final treatment process and before discharge to or mixing with the receiving waters. If chlorination is provided, a sampling point is also required immediately prior to chlorination.

14.7 ESSENTIAL FACILITIES

14.7.1 Water Supply

14.7.1.1 General

No piping, connections, or potential cross connection situations, shall exist in any part of the treatment works which, under any conditions, might cause the contamination of a potable water supply.

14.7.1.2 Direct Connections

Potable water from a municipal or separate supply may be used directly at points above grade for the following hot and cold supplies:

a. lavatory;
b. water closet;
c. laboratory sink (with vacuum breaker);
d. shower;
e. drinking fountain;
f. eye wash fountain; and
g. safety shower.

Hot water for any of the above units shall not be taken directly from a boiler used for supplying hot water to a sludge heat exchanger or digester heating unit.

14.7.1.3 Indirect Connections

Where a potable water supply is to be used for any purpose in a plant other than those listed in Section 14.7.1.2 either a break tank, pressure

pump, and pressure tank or an approved reduced pressure backflow device (AWWA C506) is required.

Water shall be discharged to the break tank through an air gap at least six inches above the maximum flood line or the spill line of the tank, whichever is higher.

A sign shall be permanently posted at every hose bib, faucet, hydrant, or sill cock located on the water system beyond the break tank or backflow preventor to indicate that the water is not safe for drinking.

14.7.1.4 Separate Potable Water Supply

Where it is not possible to provide potable water from a public water supply, a separate well may be provided. Location and construction of the well must comply with requirements of the Department. Requirements governing the construction of the well are contained in Chapter 3 of the Iowa Water Supply Facilities Design Standards.

14.7.1.5 Separate Non-Potable Water Supply

Where a separate non-potable water supply is to be provided, a break tank will not be necessary, but all system outlets shall be posted with a permanent sign indicating the water is not safe for drinking.

14.7.2 Flow Measurement

Continuous flow measurement and recording shall be provided for all wastewater treatment plants serving a population equivalent (P.E.) greater than 100. A flow measurement device shall still be provided, however, and the design of the structure shall facilitate the installation of continuous flow recording equipment and automatic samplers for facilities serving less than 100 P.E.

14.7.2.1 General

Weirs shall not be acceptable for influent flow measurement except for very low flows where self-flushing flow measuring devices are not accurate. Otherwise all influent flow measurements shall be self-flushing. Self-cleaning in-channel floats may be allowed for influent head measurements. Use of floats in stilling wells is acceptable.

14.7.2.2 Requirements for Different Systems

a. Controlled discharge lagoon - Flow measurement facilities shall be provided for the total influent flow and any discharge from the lagoon. Equipment to continuously measure and record flow rates and total influent flow is required. A V-notch weir without level monitoring equipment is permitted for measuring intermittent discharges from controlled discharge facilities.

b. Flow-through treatment system - These systems must have the capability of continuously measuring and recording flow rates and total flow to the plant.

c. If flow bypasses a portion of the plant, then additional flow measurement and recording is required.

d. Flow measuring devices for determining recycle flow, return sludge flow, and waste sludge volume shall also be provided.

e. Total retention facilities - A means for accurate determining the total daily flow into the facility is required.

14.7.2.3 Elapsed Time Meters

Elapsed time meters (ETMs) with an event recorder on lift station pump controls will generally be an acceptable method of providing continuous flow monitoring for the construction of controlled discharge lagoons and for flow-through treatment facilities serving 1000 P.E. or less. ETMs may be permitted for construction of flow-through treatment facilities serving more than a 1000 P.E., and less than 3000 P.E., but only when it can be shown that the installation of a flume with automatic continuous recording equipment, or its equivalent, is an impractical alternative.

14.7.2.4 Reliability and Accuracy

Flow measurement equipment shall accurately measure flow with a maximum deviation of $\pm$ 10 percent of true discharge rates throughout the range of discharge levels of the flow measuring device plus a deviation of $\pm$ 3 percent of the maximum design flow for the transmitting-recording equipment.

14.8 SAFETY

It is the facility owner's responsibility to ensure that the Occupational Safety and Health Administration (OSHA), the National Electric Code and other applicable building and construction codes and requirements are met during construction and subsequent operation. During construction this requirement may be met by including references to OSHA, NEC and other applicable building and construction codes in the contract documents.

14.9 LABORATORY

14.9.1 Minimum Required Laboratory Analysis Capability

Careful consideration should be given to the laboratory facilities needed for the operation control of each plant. Analyses shall be utilized which will evaluate the efficiency of the entire treatment facility as well as the efficiency of individual treatment units. The Department has established the minimum self monitoring requirements and analytical procedures for wastewater treatment plants (Chapter 63 - Monitoring, Analytical and Reporting Requirements). Additional monitoring may be required dependent upon a case-by-case evaluation of the potential impact of certain wastewater, industrial contributions to the plant, complexity of the treatment process, or other factor which requires more stringent operational control.

14.9.2 Facilities

All treatment works shall include a laboratory for making the necessary analytical determinations and operating control tests, except in individual situations where operational testing is minimal or not required and self-monitoring analyses are to be performed off-site. The laboratory shall have sufficient size, bench space, equipment and supplies to perform all on-site self-monitoring analytical work required by the operation permits, and to perform the process control tests necessary for management of each treatment process included in the design. The facilities and supplies necessary to perform analytical work to support industrial waste control programs will normally be included in the same laboratory. The laboratory size and arrangement must be sufficiently flexible and adaptable to accomplish these assignments. Recommended laboratory guidelines are contained in Appendix II.

CHAPTER 14

APPENDIX I

RECOMMENDED PROCESS PIPING COLOR CODING

Raw sludge line -brown with black bands

Sludge recirculation suction line - brown with yellow bands

Sludge draw off line - brown with orange bands

Sludge recirculation discharge line - brown

Sludge gas line - orange (or red)

Natural gas line - orange (or red) with black bands

Nonpotable water line - blue with black bands

Potable water line - blue

Chlorine line - yellow

Sewage line - gray

Compressed air line - green

Water line for heating digesters or buildings - blue with a six inch red band spaced 30 inches apart

If labeling is used the contents should be clearly indicated on the piping in a contrasting color.

CHAPTER 14

APPENDIX II

RECOMMENDED LABORATORY GUIDELINES

Location and Space

The laboratory should be located on ground level, easily accessible to all sampling points, with environmental control as an important consideration. It shall be located away from vibrating machinery or equipment which might have adverse effects on the performance of laboratory instruments or the analyst or shall be designed to prevent adverse effects from vibration. A minimum of 180 square feet of floor space should be provided for activated sludge, physical-chemical and advanced wastewater treatment plants; a minimum of 150 square feet of floor space should be provided for other type of treatment plants; and a minimum of 400 square feet of floor space should be provided for laboratories having a full time laboratory chemist. Bench-top working surface should occupy at least 35 percent of the total floor space.

Minimum ceiling height should be eight feet six inches. If possible, this height should be increased to provide for the installation of wall-mounted water stills, distillation racks, and other equipment with extended height requirements.

Additional floor and bench space should be provided to facilitate performance of analysis of industrial wastes, as required by the operation permit and the utility's industrial waste pretreatment program. The above minimum space does not provide office or administration space.

Materials

Ceilings

Acoustical tile should be used for ceilings except in high humidity areas, where they should be constructed of plaster.

Walls

Walls finishes should be light in color and nonglare.

Floors

Floor surfaces should be either vinyl asbestos or rubber, fire resistant, and highly resistant to acid, alkalines, solvents, and salts. Floor finishes should be of a single color for ease of locating small items that have been dropped.

Doors

Two exit doors should be located to permit a straight egress from the laboratory, preferably at least one to outside the building.

Panic hardware should be used. They should have large glass windows for easy visibility of approaching or departing personnel.

Automatic door closers should be installed; swinging doors should not be used.

Flush hardware should be provided on doors if cart traffic is anticipated. Kick plates are also recommended.

Cabinets and Bench Tops

Wall-hung cabinets are useful for dust-free storage of instruments and glassware. Units with sliding glass doors are preferable. They should be hung so the top shelf is easily accessible to the analyst. Thirty inches from the bench top is recommended.

One or more cupboard-style base cabinets should be provided for storing large items; however, drawer units are preferred for the remaining cabinets. Drawers should slide out so that entire contents are easily visible. They should be provided with rubber bumpers and with stops which prevent accidental removal. Drawers should be supported on ball bearings or nylon rollers which pull easily in adjustable steel channels. All metal drawer fronts should be double-wall construction.

All cabinet shelving should be acid-resistant and adjustable from inside the cabinet. Water, gas, air, and vacuum service fixtures; traps, strainers, overflows, plugs and tailpieces; and all electric service fixtures shall be supplied with the laboratory furniture.

Generally, bench-top height should be 36 inches. However, areas to be used exclusively for sit-down type operations should be 30 inches high and include kneehole space. One-inch overhangs and drip grooves should be provided to keep liquid spills from running along the face of the cabinet. Tops should be finished in large sections, 1-1 1/4 inches thick. They should be field joined into a continuous surface with acid, alkali, and solvent-resistant cements which are at least as strong as the material of which the top is made.

Hoods

Fume hoods to promote safety and canopy hoods over heat-releasing equipment, if provided, should be installed near the area where most laboratory tests are made.

Sinks

The laboratory should have a minimum of three sinks (not including cup sinks). At least two of them should be double-wall with drainboards. Additional sinks should be provided in separate work areas as needed, and identified for the use intended.

Sinks should be made of epoxy resin or plastic material with all appropriate characteristics for laboratory applications. The sinks should be constructed of material highly resistant to acids, alkalies, solvents, and salts, and should be abrasion and heat resistant and nonabsorbent.

Traps should be made of glass, plastic, or lead and easily accessible for cleaning. Waste openings should be located toward the back so that standing overflow will not interfere. All water fixtures on which hoses may be used should be provided with vacuum relief valves to prevent contamination of water lines.

Ventilation and Lighting

Laboratories should be separately air conditioned, with external air supply for 100% make-up volume. In addition, separate exhaust ventilation should be provided. Ventilation outlet locations should be remote from ventilation inlets.

Good lighting, free from shadows, is important for reading dials, meniscuses, etc., in the laboratory.

Gas and Vacuum

Natural gas should be supplied to the laboratory. Digester gas should not be used.

An adequately-sized line source of vacuum should be provided with outlets available throughout the laboratory.

Equipment, Supplies and Reagents

The laboratory shall be provided with all of the equipment, supplies, and reagents that are needed to carry out all of the facility's analytical testing requirements. Operation permit, process control, and industrial waste monitoring requirements should be considered when specifying equipment needs. References such as Standard Methods and the U.S.E.P.A. Analytical Procedures Manual should be consulted prior to specifying equipment items.

Power Supply Regulation

To eliminate voltage fluctuation, electrical lines supplying the laboratory should be controlled with a constant voltage, harmonic neutralized type of transformer. This transformer should contain less than 3% total root mean square (RMS) harmonic content in the output, should regulate to $\pm$ 1% for an input range of $\pm$ 15% of nominal voltage, with an output of 118 volts. For higher voltage requirements, the 240-volt lines should be similarly regulated.

Electrical devices in the laboratory not requiring a regulated supply (i.e., ordinary resistance heating devices) that are non-portable may be wired to an unregulated supply.

Water Still

An all-glass water still, with at least one gallon per hour capacity should be installed complete with all utility connections.

WR:bkp/WQPI216P03.04 -.28

IOWA WASTEWATER FACILITIES DESIGN STANDARDS

CHAPTER 15

SCREENING AND GRIT REMOVAL

15.2.4.4 Control Systems

15.2.4.4.1 Timing Devices
15.2.4.4.2 Manual Switch

15.2.4.5 Disposal of Screenings

15.2.4.6 Auxiliary Screens

15.2.5 Fine Screens

15.2.5.1 General

15.2.5.2 Design

15.2.5.2.1 Capacity
15.2.5.2.2 Cleaning
15.2.5.2.3 Preceding Units

15.3 COMMINUTORS

15.3.1 Location

15.3.2 Design Considerations

15.3.2.1 Location
15.3.2.2 Size
15.3.2.3 Installation
15.3.2.4 Downstream Clogging
15.3.2.5 Servicing
15.3.2.6 Electrical

15.4 GRIT REMOVAL FACILITIES

15.4.1 When Required

15.4.2 Location

15.4.2.1 General
15.4.2.2 Housed Facilities

15.4.2.2.1 Ventilation
15.4.2.2.2 Access
15.4.2.2.3 Electrical

15.4.2.3 Outside Facilities

15.4.3 Type and Number of Units

15.4.4 Design Factors

15.4.4.1 General
15.4.4.2 Channel-type Chambers
15.4.4.3 Aerated Grit Chambers
15.4.4.4 Detritus Style Grit Chambers
15.4.4.5 Grit Washing
15.4.4.6 Drains
15.4.4.7 Water
15.4.4.8 Grit Handling

IOWA WASTEWAETER FACILITIES DESIGN STANDARDS

CHAPTER 15

SCREENING AND GRIT REMOVAL

15.1 GENERAL

15.1.1 Applicability

This chapter is applicable to construction, installation or modification of any disposal system required to obtain a construction permit from this Department under the Iowa Code, Section 455B.45, and 900--64.2 of the Iowa Administrative Code (IAC).

15.1.2 Variances [900--64.2(9)"c", IAC]

When engineering justification satisfactory to the executive director is provided substantially demonstrating that variation from the design standards or siting criteria will result in either: at least equivalent effectiveness while significantly reducing costs, or improved effectiveness, such a variation from design standards or siting criteria may be accepted by the executive director.

15.1.3 Explanastion of terms

The terms "shall" or "must" are used in these standards when it is required that the standard be used. Other terms such as "should" and "recommend" indicate desirable procedures or methods which should be considered but will not be required.

15.2 SCREENING DEVICES

15.2.1 Location

15.2.1.1 Indoors

Screening or other wet process devices installed in a building where other equipment or offices are located shall be separated from the rest of the building and provided with separate outside entrances.

15.2.1.2 Outdoors

Screening devices installed outside shall be protected from freezing. Fine screens shall not be installed outside.

15.2.1.3 Access

Screening areas shall be provided with stairway access (not ladders), adequate lighting, and a convenient and adequate means for removing the screenings.

15.2.1.4 Ventilation

For indoor installations, uncontaminated air shall be introduced continuously at a rate of 12 air changes per hour, or intermittently at a rate of 30 air changes per hour. Intermittently operated ventilating equipment shall be interconnected with the lighting system.

15.2.2 Electrical

Electrical equipment, fixtures and controls (including ventilators and heaters) in screening areas where hazardous gases may accumulate shall meet the requirements of the National Electrical Code for Class 1, Group C, Division 1 locations. Explosion proof gas detectors shall be provided for such areas.

15.2.3 Servicing

Hosing equipment shall be provided to facilitate cleaning. Provision shall be made for isolating or removing units from their location for servicing.

15.2.4 Bar Racks and Screens

15.2.4.1 When Required

All wastewater treatment plants shall be provided with protection for pumps or other equipment by installing coarse bar racks, bar screens or trash baskets. Protection for comminutors or other grinding devices shall be provided by coarse bar racks.

15.2.4.2 Design and Installation

15.2.4.2.1 Bar Spacing

Clear openings between bars shall be no less than one inch for manually cleaned screens. Clear openings for mechanically cleaned screens may be as small as 5/8 of an inch. Maximum clear openings shall b 1 3/4 inches.

15.2.4.2.2 Slope

Manually cleaned screens, except those for emergency use, shall be placed on a slope of 30 to 60 degrees from the horizontal.

15.2.4.2.3 Velocities

At AWW flow conditions, approach velocities should be no less than 1.25 feet per second to prevent settling; and no greater than 3.0 fps at MWW flow to prevent forcing material through the openings.

15.2.4.2.4 Channels

Channels preceding and following screens shall be shaped to minimize settling of solids. Fillets shall be installed as necessary.

Bypass channels shall be provided and equipped with the necessary gates to isolate flow from any single mechanical screening unit. Provisions shall also be made to facilitate dewatering each mechanical unit. Channels shall be designed for ease of access for cleaning.

Single channels with manually cleaned screens which are removable without dewatering are aceptable for small installations.

15.2.4.2.5 Invert

The screen channel invert shall be 3.0 to 6.0 inches below the invert of the incoming sewer unless impractical due to hydraulic limitations.

15.2.4.2.6 Flow Distribution

Entrance channels shall be designed to provide equal and uniform distribution of flow to the screens.

15.2.4.2.7 Flow Measurement

Screening devices shall not be located such that changes in backwater elevations will interfere with the accuracy of upstream flow measuring equipment.

15.2.4.3 Accessibility

15.2.4.3.1 Railings and Gratings

Manually cleaned screen channels shall be protected by guard railings and/or deck gratings, with adequate provisions for removal of gratings to facilitate raking.

Mechanically cleaned screen channels shall be protected by guard railings and/or deck gratings. Consideration should also be given to temporary access arrangements to facilitate maintenance and repair.

15.2.4.3.2 Enclosures

Mechanical screening equpment shall have adequate removable enclosures to protect personnel against accidental contact with moving parts.

15.2.4.3.3 Raking

Manually cleaned screening facilities shall include an accessible platform from which the operator may rake screenings easily and safely. Suitable drainage facilities shall be provided for both the platform and the storage areas.

15.2.4.4 Control Systems

15.2.4.4.1 Timing Devices

All mechanical units which are operated by timing devices shall be provided with auxiliary controls which will set the cleaning mechanism in operation at a preset high water elevation.

15.2.4.4.2 Manual Switch

Automatic controls should be supplemented by a manual start, stop and/or reverse switch located in view of the equipment.

15.2.4.5 Disposal of Screenings

Facilities must be provided for removal, handling, storage, and disposal of screenings in a sanitary manner. Separate grinding of screenings and return to the sewage flow is unacceptable except for the material which passes the coarse bar racks required ahead of comminutors or other grinding devices.

15.2.4.6 Auxiliary Screens

Where a single mechanically cleaned screen is used, an auxiliary manually cleaned screen shall be provided. Where two or more mechanically cleaned screens are used, the design shall provide for taking any unit out of service without sacrificing the capability to handle the PHWW flow.

15.2.5 Fine Screens

15.2.5.1 General

Moving or rotating fine screens with maximum openings of 0.06 inches may be used in lieu of primary sedimentation (except preceding RBC units) providing that sub-

sequent treatment units are designed on the basis of anticipated screen performance. Fine screens should not be considered equivalent to primary sedimentation. Static fine screens shall not be permitted for continuous duty in lieu of primary sedimentation.

15.2.5.2. Design

15.2.5.2.1 Capacity

A minimum of two fine screens shall be provided, each unit being capable of independent operation. Capacity shall be provided to treat PHWW flow with one unit out of service.

15.2.5.2.2 Cleaning

A continuous cleaning device such as jets or wiper blades shall be incorporated in the design of moving or rotating fine screens, with provisions for automatic conveyance of the material removed from the screen to the sludge treatment processes.

15.2.5.2.3 Preceding Units

Continuously operated fine screens shall be preceded by a bar screen, by grit removal facilities and by facilities for the removal of floatable oils and greases. Comminuting devices are not necssary ahead of fine screens.

15.3 COMMINUTORS

15.3.1 Location

Provisions for location shall be in accordance with those for screening devices, Section 15.2.1.

15.3.2 Design Considerations

15.3.2.1 Location

Comminutors should be located downstream of any grit removal requipment.

15.3.2.2 Size

Comminutor capacity shall be adequate to handle PHWW flow.

15.3.2.3 Installation

A screened bypass channel shall be provided with capacity to handle the PHWW flow. The use of the bypass channel should be automatic at depths of flow exceeding the design capacity of the comminutor.

Bypass channels will not be required where two comminutors are installed. Each comminutor shall be capable of comminuting the PHWW flow.

Channels shall be provided with the necessary gates to insolate flow from any comminutor unit, and provisions shall be made to facilitate dewatering each unit.

15.3.2.4 Downstream Clogging

Provisions shall be made to minimize the problem of downstream clogging caused by formation of rag ropes if comminutors are proposed for plants with digesters or jet type aerators for activated sludge.

15.3.2.5 Servicing

Provisions shall be made to facilitate servicing units in place or removing units from their location for servicing.

15.3.2.6 Electrical

Electrical equipment, fixtures and controls (including ventilators and heaters) in comminutor chambers where hazardous gases may accumulate shall meet the requirements of the National Electrical Code for Class 1, Group C, Division 1 locations. Explosion proof gas detectors shall be provided for such areas. Motors in areas not governed by this requirement may need protection against accidental submergence. Control switches or a disconnecting device for the comminutor shall be located in view of the comminutor.

15.4 GRIT REMOVAL FACILITIES

15.4.1 When Required

Grit removal facilities shall be provided for all wastewater treatment facilities serving systems with combined sewers or systems receiving substantial quantities of grit. Grit removal facilities shall also be provided ahead of continuously operated fine screens.

15.4.2 Location

15.4.2.1 General

Grit removal facilities should be located ahead of pumps and comminuting devices. Coarse bar racks should be placed ahead of grit removal facilities.

15.4.2.2 Housed Facilities

15.4.2.2.1 Ventilation

Uncontaminated air shall be introduced continuously at a rate of 12 air changes per hour, or intermittently at a rate of 30 air changes per hour. Intermittently operated ventilating equipment shall be interconnected with the lighting system. Odor control facilities may also be warranted.

15.4.2.2.2 Access

Adequate stairway access to above- or below-grade facilities shall be provided.

15.4.2.2.3 Electrical

All electrical equipment, fixtures and controls (including ventilators and heaters) in enclosed grit removal areas where hazardous gases may accumulate shall meet the requirements of the National Electrical Code for Class 1, Group C, Division 1 locations. Explosion proof gas detectors shall be provided for such areas.

15.4.2.3 Outside Facilities

Grit removal facilities located outside shall be protected from freezing.

15.4.3 Type and Number of Units

Plants treating wastes from combined sewers and plants utilizing fine screens shall have at least two mechanically cleaned grit removal units, with provisions for bypassing. Adequate capacity for the MWW flow shall be provided with the largest unit out of service. A single manually cleaned or mechanically cleaned grit chamber with bypass is acceptble for small sewage treatment plants serving separate sanitary sewer systems. Minimum facilities for larger plants serving separate sanitary sewers should be at least one mechanically cleaned unit with a bypass. Facilities other than channel-type are acceptable if provided with adequate and flexible controls for agitation and/or air supply devices and with grit collection and removal equipment.

15.4.4 Design Factors

15.4.4.1 General

Design of grit chambers shall be based on the size and specific gravity of the grit particle to be removed. If this information is not obtained from actual field

surements, then the design shall assume removal of all particles retained on a 65 mesh sieve (0.21 mm opening) and having a minimum specific gravity of 2.65.

15.4.4.2 Channel-type Chambers

Positive hydraulic control shall be provided through the use of a parabolic cross-section controlled by a downstream Parshall flume or a rectangular cross-section controlled by a downstream proportional weir to maintain a channel velocity of one foot per second through the expected flow range.

The length of the channel shall be sufficient for the grit to reach the bottom plus a safety factor of 2 times the maximum depth for entrance and exit disturbances.

15.4.4.3 Aerated Grit Chambers

Air rates should be adjustable in the range of 3 to 8 cubic feet per minute per foot of tank length.

The detention time at the MWW flow rate should be in the range of 3 - 5 minutes.

Inlets and outlets shall be designed to prevent short circuiting. The inlet to the chamber should introduce the wastewater directly into the circulation pattern caused by the air diffusion. The outlet should be at a right angle to the inlet, and consideration should be given to installing a baffle near the outlet.

The grit chamber shall be designed to avoid producing dead spaces.

15.4.4.4 Detritus Style Grit Chambers

Hydraulics shall be controlled by adjustable deflectors that insure a relatively uniform velocity across the entire tank.

Design shall consider the size particle to be removed by settling and the MWW flow rate. The depth of flow shall be such that the flow is non-turbulent, with an additional allowance of depth to allow for the raking mechanisms.

15.4.4.5 Grit Washing

The need for grit washing shall be determined by the method of final grit disposal.

15.4.4.6 Drains

Provision shall be made for isolating and dewatering each unit. Drainage from grit washing facilities carrying organic solids washed from the grit shall be added to the plant flow downstream of the grit removal facilities.

15.4.4.7 Water

An adequate supply of water under pressure shall be provided for cleanup.

15.4.4.8 Grit Handling

Grit removal facilities located in deep pits shall be provided with mechanical equipment for hoisting or transporting grit to ground level. Impervious, nonslip, working surfaces with adequate drainage shall be provided for grit handling areas. Grit transporting facilities shall be provided with protection against freezing and loss of material.

Adopted March 22, 1984
Amended May 20, 1987

WASTEWATER FACILITIES DESIGN STANDARDS

CHAPTER 16

SETTLING

16.4 SLUDGE AND SCUM REMOVAL

16.4.1 SCUM REMOVAL

16.4.2 SLUDGE REMOVAL
- 16.4.2.1 Sludge Hopper
- 16.4.2.2 Cross-Collectors
- 16.4.2.3 Sludge Removal Piping
- 16.4.2.4 Sludge Removal Control

16.5 PROTECTIVE AND SERVICE FACILITIES

16.5.1 OPERATION PROTECTION

16.5.2 MECHANICAL MAINTENANCE ACCESS

16.5.3 ELECTRICAL FIXTURES AND CONTROLS

16.5.4 COLD WEATHER PROTECTION

IOWA WASTEWATER DESIGN STANDARDS

CHAPTER 16

SETTLING

16.1 GENERAL

16.1.1 Applicability

This chapter is applicable to construction, installation or modification of any disposal system required to obtain a construction permit from this Department under the Iowa Code, Section 455B.183, and 567--64.2 of the Iowa Administrative Code (I.A.C.).

16.1.2 Variances [567--64.2(9)"c" I.A.C.]

When engineering justification satisfactory to the executive director is provided substantially demonstrating that variation from the design standards or siting criteria will result in either: at least equivalent effectiveness while significantly reducing cost, or improved effectiveness, such a variation from design standards or siting criteria may be accepted by the executive director.

16.1.3 Explanation of Terms

The terms "shall" or "must" are used in these standards when it is required that the standard be used. Other terms such as "should" and "recommended" indicate desirable procedures or methods which should be considered but will not be required.

16.2 GENERAL CONSIDERATIONS

16.2.1 Number of Units

Multiple units capable of independent operation are desirable and shall be provided in all plants except those specified in Section 14.5

16.2.2 Flow Distribution

Flow splitting devices and control appurtenances (i.e., valves, gates, splitter boxes, etc.) shall be provided to permit proper proportioning of flow to each unit in accordance with Section 14.4.9.3.

16.3 DESIGN CONSIDERATION

16.3.1 Dimensions

The sidewater depth for primary settling tanks shall not be less than 7 feet. Settling tanks following the activated sludge process shall have sidewater depths of at least 12 feet to provide adequate separation zone between the sludge blanket and the overflow weirs. Settling tanks following the activated sludge process may have 10 foot sidewater depths provided that less than 340 lbs/day of BOD_5 is treated and provided the clarifier is followed by a 5-day pond. Intermediate settling tanks following first stage fixed film reactors shall have sidewater depths of at least 7 feet. Final settling tanks following fixed film reactors shall have sidewater depth of at least 10 feet.

16.3.2 Surface Overflow Rates

16.3.2.1 General

Settling rates stated in this section are based on typical clarifier designs for domestic wastewaters without additions of chemical settling aids. If chemical coagulants are added to aid settling, overflow rates may be increased based on pilot studies or similar facilities already in operation.

The flows used in the following sections are designated by the appropriate initials as they were identified in 14.4.5.1 for municipal treatment plants. The corresponding flow designations for AWW and PHWW flows for industrial wastewater treatment facilities would be the average rated flows and the peak hour flows.

16.3.2.2 Primary Settling Tanks

Surface overflow rates for primary tanks should not exceed 1,000 gallons per day per square foot at AWW flows or 1,500 gallons per day per square foot for PHWW flows. Clarifier sizing shall be calculated for both flow conditions and the larger surface area determined should be used. At these rates, primary settling of normal domestic sewage can be expected to remove 30 to 35% of the influent BOD. The overflow rates may be increased, but lower removal rates shall be assumed unless adequate chemical addition is provided.

Anticipated BOD removal for sewage containing appreciable quantities of industrial wastes should be determined by laboratory tests, actual settling data,

and consideration of the quantity and character of the wastes.

16.3.2.3 Intermediate Settling Tanks

Surface settling rates for intermediate settling tanks following the carbonaceous stage of a separate stage nitrification activated sludge process shall not exceed 900 gallons per day per square foot at AWW flows or 1,200 gallons per day per square foot for PHWW flows. Higher surface settling rates may be permitted if such rates are shown to have no adverse effects on subsequent treatment units.

Surface Settling rates for intermediate settling tanks following other treatment units shall not exceed 1,500 gallons per day per square foot based on PHWW flows.

16.3.2.4 Final Settling Tanks

16.3.2.4.1 Final Settling Tanks - Fixed Film Biological Reactors

Surface overflow rates for settling tanks following trickling filters or rotating biological contactors treating domestic wastewater shall not exceed 1,200 gallons per day per square foot for PHWW flows.

The allowable surface overflow rates may be increased if chemical addition is provided. This determination shall be based on data from pilot studies, similar systems already in operation, or the literature.

16.3.2.4.2 Final Settling Tanks - Activated Sludge

To perform properly while producing a concentrated return flow, activated sludge settling tanks must be designed to meet thickening as well as solid separation requirements. Since the rate of recirculation of return sludge from the final settling tanks to the aeration or reaeration tanks is quite high in activated sludge processes, surface overflow rates shall be low enough to minimize the problems with high solids loadings, density currents, inlet hydraulic turbulence, and occasional poor sludge settleability. The surface settling rates of final settling tanks following the activated sludge processes

shall be based on PHWW flow. The hydraulic loadings for facilities treating domestic wastewater shall not exceed the following:

Process Type	Hydraulic Loading at PHWW Flow gpd/s.f.
All (except as listed below)	1,200
Contact Stabilization	1,200
Extended Aeration	1,000
Separate Nitrification	800
High-Purity Oxygen With Primary Settling	1,200

The final settling tank solids loading for all activated sludge processes shall not exceed 30 pounds solids per day per square foot at AWW flow or 50 pounds solids per day per square foot at PHWW flow. Settling tank sizing shall be calculated for both flows and both solids loading conditions and the largest surface area determined shall be used.

The allowable surface overflow rates may be increased if chemical addition is provided. This determination shall be based on data from pilot studies, similar systems already in operation, or the literature.

16.3.2.4.3 Final Settling Tanks - Industrial Waste

For industrial waste treatment facilities and domestic waste treatment facilities with significant industrial contributions, the surface overflow rates shall be based on pilot studies, data from similar systems already in operation, or literature data. The surface overflow rates shall not exceed those allowed in Section 16.3.2.4.1 and 16.3.2.4.2.

When the department has actual operating experience with two similar facilities it may require lower settling rates or additional solids removal capability.

16.3.3 Inlet Structures

Inlet structures shall be designed to dissipate the inlet velocity, to distribute the flow equally both horizontally and vertically and to prevent short circuiting. Channels shall be designed to maintain a velocity of at least one foot per second at one-half the AWW flow. Corner pockets and dead ends shall not be allowed and corner fillets or channeling shall be used where necessary. Provisions shall be made for elimination or removal of floating materials in the inlet structures.

16.3.4 Weirs

16.3.4.1 General

Overflow weirs shall be readily adjustable for leveling. The range of adjustment shall take into account uneven settling over the life of the structure. Overflow weirs shall be serrated with V-Notches or similar notches.

16.3.4.2 Location

Overflow weirs shall be located to optimize actual hydraulic detention time, and minimize short circuiting. Peripheral weirs should be placed at least one foot away from the clarifier wall or baffles should be provided to minimize wall effects. Interior weirs are permissible if accompanied with effective means of scum removal.

16.3.4.3 Design Rates

Weir loadings shall not exceed 10,000 gallons per day per lineal foot for plants designed for AWW flows of 1.0 mgd or less. Higher weir loadings may be used for plants designed for larger AWW flows, but should not exceed 15,000 gallons per day per lineal foot. If pumping to the settling tanks is required, weir loading should be related to pump delivery rates to avoid short circuiting. Pumping should not be intermittent, but as nearly continuous as possible, and pumping into a final clarifier should be avoided.

16.3.4.4 Weir Troughs

Weir troughs shall be designed to prevent submergence at PHWW flow with the largest tank out of service, and

to maintain a velocity of at least 1 foot per second at one-half the AWW flow.

16.3.5 Unit Dewatering and Bypassing

Unit dewatering features shall conform to the provisions outlined in section 14.4.8.2. Unit bypass design shall also provide for proportional redistribution of the plant flow to the remaining units.

16.3.6 Freeboard

Walls of settling tanks shall extend at least 6 inches above the surrounding ground surface and shall provide not less than 12 inches freeboard. Additional freeboard or the use of wind screens is recommended where large settling tanks are subject to high winds that would cause tank surface waves and inhibit effective scum removal.

16.4 SLUDGE AND SCUM REMOVAL

16.4.1 Scum Removal

Scum collection and removal facilities, including baffling, shall be provided for all primary and final settling tanks. Characteristics of certain treatment process scum (i.e. nitrification, industrial wastewater) which may adversely affect pumping, piping, sludge handling and disposal, shall be recognized in design.

16.4.2 Sludge Removal

Sludge collection and withdrawal facilities shall be designed to assure rapid removal of the sludge. Suction withdrawal should be provided for activated sludge settling tanks.

16.4.2.1 Sludge Hopper

The minimum slope of the side walls shall be 1.7 vertical to 1 horizontal. Hopper wall surfaces shall be made smooth with rounded corners to aid in sludge removal. Hopper bottoms shall have a maximum plan dimension of 2 feet. Extra depth sludge hoppers for sludge thickening are not acceptable.

16.4.2.2 Cross-Collectors

Cross-collectors serving one or more settling tanks may be useful in place of multiple sludge hoppers.

16.4.2.3 Sludge Removal Piping

Each hopper shall have an individual valved sludge withdrawal line at least 6 inches in diameter. The

static head available for withdrawal of sludge shall be 30 inches or greater, as necessary to maintain a 3 foot per second velocity in the withdrawal pipe. Clearance between the end of the withdrawal line and the hopper walls should be sufficient to prevent "bridging" of the sludge. Provisions shall be made for rodding or backflushing individual pipe runs. Piping may also be provided to return waste sludge to primary clarifiers.

16.4.2.4 Sludge Removal Control

Sludge wells equipped with telescoping valves or other appropriate equipment should be provided for viewing, sampling and controlling the rate of sludge withdrawal. The use of easily maintained sight glass, sampling valves, and sludge density meters may be appropriate. A means of measuring the sludge removal rate shall be provided. Air lift type of sludge removal will not be approved for removal of primary sludges. Sludge pump motor control systems should include time clocks and valve activators for regulating the duration and sequencing of sludge removal.

16.5 PROTECTIVE AND SERVICE FACILITIES

16.5.1 Operation Protection

All settling tanks should be equipped to enhance safety for operators. Such features should appropriately include machinery covers, life lines, stairways, walkways, handrails and slip resistant surfaces.

16.5.2 Mechanical Maintenances Access

The design should provide for convenient and safe access to routine maintenance items such as gear boxes, scum removal mechanisms, baffles, weirs, inlet stilling baffle area, and effluent channels.

16.5.3 Electrical Fixtures and Controls

The fixtures and controls should be located so as to provide convenient and safe access for operation and maintenance. Adequate area lighting should be provided. [Also see Chapter 14, paragraph 8 - safety]. Appropriate pump controls should be located near sludge and scum viewing points.

16.5.4 Cold Weather Protection

The design should provide measures for cold weather protection such as the use of wind screens, protective walls, and other means, as appropriate, to alleviate the problems of freezing.

WR:bkp/WQPI216P02.03 -.10

IOWA WASTEWATER FACILITIES DESIGN STANDARDS

CHAPTER 17

Sludge Handling and Disposal

IOWA WASTEWATER FACILITIES DESIGN STANDARDS

CHAPTER 17

Sludge Handling and Disposal

17.1 DESIGN CONSIDERATIONS

The selection of sludge handling and disposal methods shall address the following:

a. Volume of sludge to be treated. Whenever possible, the design information should be obtained from chemical analysis and measurement;

b. Energy requirements;

c. Efficacy of sludge thickening;

d. Complexity of equipment;

e. Staffing requirements;

f. Toxic effects of heavy metals and other substances on sludge stabilization and disposal;

g. Prior treatment process e.g., poor quality supernatant results from anaerobic digestion of activated sludge;

h. Treatment of side-stream flow such as digester and thickener supernatant;

i. A back-up method of sludge handling and disposal; and

j. Methods of ultimate sludge disposal.

Complete calculations including design basis, unit sizing and process reliability shall be presented in the preliminary report or facility plan.

17.2 SLUDGE THICKENING AND CONDITIONING

17.2.1 Sludge Thickening

As the first step of sludge handling, the need for sludge thickeners to reduce the volume of sludge shall be addressed in the preliminary report or facilities plan. If it is determined that sludge thickening is needed, the design of thickeners (gravity, dissolved-air flotation, centrifuge, and others) shall consider the type and concentration of sludge, the sludge stabilization processes, the method of ultimate sludge disposal, chemical needs, and the cost of operation. Particular attention shall be given to the pumping and piping of the concentrated sludge and possible onset of anaerobic conditions. Sludge should be thickened to at least 5% solids prior to transmission to digesters.

17.2.2 Sludge conditioning

Conditioning is the treatment of sludge to facilitate water removal by a thickening or dewatering process. Conditioning normally has a significant effect on both the efficiency of the thickening and/ or dewatering process and the liquid treatment portion of the plant. A thorough discussion shall address the effects of conditioning on all processes.

17.3 SLUDGE STABILIZATION AND HOLDING

17.3.1 Anaerobic Sludge Digestion

17.3.1.1 General

a. Multiple Units

Multiple tanks are recommended. Where a single tank is used, an alternate method of sludge pro-cessing or emergency storage to maintain con-tinuity of service shall be provided.

b. Depth

For those units proposed to serve as supernatant separation tanks, the depth shall be sufficient to allow for the formation of a reasonable depth of supernatant liquor. A minimum sidewater depth of 20 feet is recommended.

c. Maintenance Provisions

To facilitate draining, cleaning, and maintenance, the following features shall be provided:

1. Slope

The tank bottom shall slope to drain toward the withdrawal pipe. For tanks equipped with a suction mechanism for withdrawal of sludge, a bottom slope not less than 1:12 is required. Where the sludge is to be removed by gravity alone, a slope not less than 1:4 is required.

2. Access Manholes

At least two access manholes not less than 24-inch diameter shall be provided in the top of the tank. The gas dome, if provided, shall not be considered an access manhole. There shall be stairways or attached ladders to reach the access manholes. A separate sidewall manhole shall be provided. The opening shall be large enough to permit the use of mechanical equipment to remove grit and sand. All access manholes shall be provided with gas tight and water tight covers.

3. Safety

Nonsparking tools, safety lights, rubber-soled shoes, safety harness, gas detectors for inflammable and toxic gases, and at least two self-contained breathing units shall be provided for emergency use.

17.3.1.2 Sludge Inlets and Outlets

Multiple recirculation withdrawal and return points, to enhance flexible operation and effective mixing, shall be provided, unless mixing facilities are incorporated within the digester. The returns, in order to assist in scum breakup, shall discharge above the liquid level and be located near the center of the tank.

Raw sludge discharge to the digester shall be through the sludge heater and recirculation return piping, or directly to the tank if internal mixing facilities are provided.

Sludge withdrawal to disposal shall be from the bottom of the tank. This pipe shall be interconnected with the recirculation piping to increase versatility in mixing the tank contents, if such piping is provided.

17.3.1.3 Tank Capacity

The total digestion tank capacity should be determined by rational calculations based upon such factors as volume of sludge to be treated, total solids concentration, volatile solids concentration, percent solids and character, the temperature to be maintained in the digesters, the degree or extent of mixing to be obtained, the degree of volatile solids reduction required, and further treatment and/or disposal of digested sludge and supernatant liquors. Sufficient sludge storage capacity shall be provided for periods of inclement weather and equipment failure. If possible, adequate detention should be provided to avoid sludge application on frozen or snow covered ground. Calculations shall be submitted to justify the basis of design.

When such calculations are not based on the above factors, the minimum combined digestion tank capacity outlined below will be required. Such requirements assume that a raw sludge is derived from ordinary domestic wastewater, that a digestion temperature is to be maintained in the range of 90° to 100°F. (32°C to 38°C), that 40 to 50 percent volatile matter will be maintained in the digested sludge, and that the digested sludge will be removed frequently from the system.

Mixing is required as part of the digestion process, and each tank requiring mixing shall have sufficient mixing equipment or flexibility in system design to ensure that the total capability for mixing is not lost with the loss of any one piece of mixing equipment (motors, pumps, compressors, etc.). It is permissible for the backup equipment to be uninstalled.

a. Completely-Mixed Systems

Completely-mixed systems shall provide for intimate and effective mixing to prevent stratification and to assure homogeneity of digester content. The system may be loaded at a rate up to 80 pounds of volatile solids per 1,000 cubic feet of volume per day in the active digestion units. The minimum sludge retention time shall be 15 days.

b. Moderately-Mixed

For digestion systems where mixing is accomplished only by circulating sludge through an external heat exchanger, it is recommended that the system be loaded at a rate of no more than 40 pounds of volatile solids per 1,000 cubic feet of volume per day in the active digestion units. Subject to Departmental concurrence, this loading may be modified upward or downward depending upon the degree of mixing provided. The minimum sludge retention time shall be 30 days.

17.3.1.4 Gas Collection, Piping and Appurtenances

a. General

All portions of the gas system, including the space above the tank liquor, the storage facilities and the piping, shall be so designed that under all normal operating conditions, including sludge withdrawal, the gas will be maintained under positive pressure. All enclosed areas where gas leakage might occur shall be adequately ventilated.

b. Safety Equipment

Safety facilities shall be included where gas is produced. Pressure and vacuum relief valves and flame traps, together with automatic safety shutoff valves, shall be provided. Water seal equipment shall not be installed. Gas safety equipment and gas compressors shall be housed in a separate room with an exterior entrance.

c. Gas Piping and Condensate

Gas piping shall be of adequate diameter and shall slope to condensate traps at low points. The use of float-controlled condensate traps is not permitted.

d. Gas Utilization Equipment

Gas-fired boilers for heating digesters shall be located in a separate room not connected to the digester gallery. Such separated room would not ordinarily be classified as a hazardous location. Gas lines to these units shall be provided with suitable flame traps.

e. Electrical Fixtures

Electrical fixtures and controls, in places enclosing anaerobic digestion appurtenances, where hazardous gases are normally contained in the tanks and piping, shall comply with the National Electrical Code for Class I, Group D, Division 2 locations. Digester galleries should be isolated from normal operating areas, in accordance with para-graph g. of this section, to avoid an extension of the hazardous location.

f. Waste Gas

Waste gas burners shall be readily accessible and should be located at least 25 feet away from any plant structure if placed at ground level, or may be located on the roof of the control building if sufficiently removed from the tank.

All waste gas burners shall be equipped with automatic ignition, such as pilot light or a device using a photoelectric cell sensor. Consideration should be given to the use of natural or propane gas to insure reliability of the pilot light.

g. Ventilation

Any underground enclosures connecting with digestion tanks or containing sludge or gas piping or equipment shall be provided with forced ventilation in accordance with Sections 32.7 and 32.72 of Ten States Standards for Sewage Works, 1978 edition. The piping gallery for digesters should not be connected to other passages. Where used, tightly fitting, self-closing doors shall be provided at connecting passage-ways and tunnels to minimize the spread of gas.

h. Meter

A gas meter with bypass shall be provided to meter total gas production.

17.3.1.5 Digester Heating

a. Insulation

Digestion tanks should be constructed above groundwater level and shall be suitably insulated to minimize heat loss.

b. Heating Facilities

Sludge may be heated by circulating the sludge through external heaters or by heating units located inside the digestion tank.

1. External Heating

Piping should be designed to provide for the preheating of feed sludge before introduction to the digesters.

Provisions shall be made in the layout of the piping and valving to facilitate cleaning of these lines. Heat exchanger sludge piping shall be sized for heat transfer requirements.

2. Other Heating Methods:

Other types of heating facilities will also be considered on their own merits.

c. Heating Capacity

Heating capacity sufficient to consistently maintain the design sludge temperature shall be provided. Where digester tank gas is used for sludge heating, an auxiliary fuel supply is required.

d. Hot Water Internal Heating Controls

1. Mixing Valves

A suitable automatic valve shall be provided to temper the boiler water with return water so that the inlet-water to the heat jacket can be held below a temperature at which caking will be accentuated. Manual control shall also be provided by suitable by-pass valves.

2. Boiler Controls

The boiler shall be provided with suitable automatic controls to maintain the boiler temperature at approximately 180°F (82°C) to minimize corrosion and to shut off the main gas supply in the event of pilot burner or electrical failure, low boiler water level, or excessive temperature.

3. Thermometers

Thermometers shall be provided to show temperatures of the sludge, hot water feed, hot water return, and boiler water.

17.3.1.6 Supernatant Withdrawal

a. Piping Size

Supernatant piping shall not be less than 6 inches in diameter.

b. Withdrawal Arrangements

1. Withdrawal Levels

Piping shall be arranged so that withdrawal can be made from three or more levels in the digester. A positive unvalved vented overflow shall be provided.

2. Supernatant Selector

If a supernatant selector is provided, provisions shall be made for at least one other drawoff level located in the supernatant zone of the tank in addition to the unvalved emergency supernatant drawoff pipe. High pressure backwash facilities shall be provided.

c. Sampling

Provisions shall be made for sampling each supernatant drawoff level. Sampling pipes shall be at least 1½ inches in diameter, and shall terminate at a suitably-sized sampling sink or basin.

d. Supernatant Disposal

The supernatant shall be returned to the treatment process at an appropriate point. Consideration should be given to the effect of supernatant on plant performance and effluent quality and whether supernatent conditioning is appropriate.

17.3.2 Aerobic Sludge Digestion

17.3.2.1 Tank Duplication

Multiple tanks are recommended. A single sludge digestion tank may be used in the case of small treatment plants or where adequate provision is made for sludge handling and where a single unit will not adversely affect normal plant operations.

17.3.2.2 Mixing and Air Requirements

Aerobic sludge digestion tanks shall be designed for effective mixing. Sufficient aeration shall be provided to maintain dissoved oxygen of at least 1 mg/l.

a. Diffused Air Systems

To meet minimum mixing and oxygen requirements, an aeration rate of 30 cfm per 1,000 cubic feet of tank volume shall be provided with the largest blower out of service.

1. Bottom Diffusers

The nonclog type of diffuser is required. All plants employing less than four independent tanks shall be designed to ncorporate removable diffusers that can be serviced and/or replaced without dewatering the tank.

The air diffusion system for the total aerobic digestion system shall be designed such that the diffusers can be isolated without losing more than 25% of the oxygen transfer capability of the total system.

2. Jet Aeration

If jet aerators are utilized, a complete spare aeration system (pumps and aerator) shall be pro provided on site and shall be capable of being installed without dewatering the tank, unless at least 75% of the oxygen transfer capability of the system can be maintained with the largest aeration unit inoperable.

b. Mechanical Aeration Systems

Mechanical aerators shall not be used unless adequate performance data is submitted for existing comparable installation of the aerators proposed to satisfactorily demonstrate that the aerators are capable of continuous operation during periods of severe climatic conditions.

If mechanical aerators are utilized, a minimum of 1.0 horsepower per 1,000 cubic feet shall be provided. At least two aerators shall be installed. A complete spare mechanical aerator shall be provided on site unless at least 75% of the oxygen transfer capability of the system can be maintained with the largest aeration unit inoperable. Replacement of mechanical aerators shall be provided such that re-placement can be accomplished without dewatering the tank. Where mechanical aerators are used, if the solids concentration is greater than 8,000 mg/l, bottom mixers shall be provided.

17.3.2.3 Tank Capacity

The determination of tank capacities shall be based on rational calculations, including such factors as quantity of sludge produced, sludge characteristics, time of aeration, and sludge temperature. Sufficient sludge storage capacity shall be provided for periods of inclement weather and equipment failure. If possible, adequate detention should be provided to avoid sludge application on frozen or snow covered ground. Calculations shall be submitted to justify the basis of design.

a. Volatile Solids Loading

It is recommended that the volatile suspended solids loading not exceed 100 pounds per 1,000 cubic feet of volume per day in the digestion units. Lower loading rates may be necessary depending on temperature, type of sludge, and other factors.

b. Solids Retention Time

Required minimum solids retention time for stabilization of biological sludges vary depending on type of sludge. A minimum of 15 days retention shall be provided for waste activated sludge and 20 days for combination of primary and waste activated sludge, or primary sludge alone. Where sludge temperature is lower than 59°F (15°C), additional detention time shall be provided so that digestion will occur at the lower biological reaction rates.

17.3.2.4 Supernatant Separation

Provisions shall be made for effective separation and withdrawal of supernatant and for effective collection and removal of scum and grease. The supernatant shall be returned to the treatment process at an appropriate point.

17.3.3 Other Methods of Sludge Stabilization

If other sludge stabilization methods, such as heat treatment, lime stabilization or composting are considered a detailed description of the process and design data shall accompany the preliminary report or facility plan.

17.3.4 Sludge Holding Tanks

Sludge holding may be provided either (1) as storage where the sludge has been stabilized through the treatment process itself or (2) in addition to the storage provided in the digestor.

17.3.4.1 Tank Reliability

A single sludge holding tank may be used when adequate provisions are made for sludge handling and when a single unit will not adversely affect normal plant operation.

17.3.4.2 Tank Capacity

The determination of capacity shall be based on rational calculations, including such factors as quantity of sludge, sludge characteristics, and climatic conditions.

Sufficient sludge storage capacity shall be provided for periods of inclement weather and equipment failure. If possible, adequate detention should be provided to avoid sludge application on frozen or snow covered ground. Calculations shall be submitted to justify the basis of design.

17.3.4.3 Mixing and Air Requirements

Holding tanks shall be designed for mixing by satisfactory aeration equipment.

a. Diffused Air Systems

To meet minimum mixing requirements, an aeration rate of 20 cfm per 1,000 ft^3 of tank volume shall be provided with the largest blower out of service. If diffusers are used, the nonclog type is required and they shall be designed to permit continuity of service.

b. Mechanical Aeration Systems

If mechanical aerators are utilized, a minimum of 1.0 horsepower per 1000 ft^3 shall be provided. Use of mechanical equipment is discouraged when freezing temperatures are normally expected.

17.3.4.4 Supernatant Separation

Facilities shall be provided for effective separation and withdrawal of supernatant and for effective collection and removal of scum and grease. Supernatant shall be returned to the treatment process at an appropriate point.

17.3.5 Sludge Holding Lagoons

Sludge holding lagoons shall not be utilized for final disposal of sludges. Unless adequate justification is provided to the Department, sludge holding lagoons should not be utilized either (1) as storage where the sludge has been stabilized through the treatment process itself or (2) in addition to the storage provided in the digestor. When sludge holding lagoons are justified, they must be designed in accordance with 17.3.5.1 through 17.3.5.6.

17.3.5.1 Lagoon Reliability

A single lagoon may be used where adequate provisions are made for sludge handling and where a single lagoon will not adversely affect normal plant operation.

17.3.5.2 Lagoon Capacity

Capacity shall be in accordance with 17.3.4.2.

17.3.5.3 Mixing and Air Requirements

Mixing and air requirements shall be in accordance with 17.3.4.3.

17.3.5.4 Cleaning

The lagoon(s) shall be designed to facilitate cleaning.

17.3.5.5 Lagoon Construction Details

The lagoon shall, in general, be constructed in accordance with 18C.7 of these design standards.

17.3.5.6 Supernatant Separation

Facilities may be provided for effective separation and withdrawal of supernatant. Supernatant shall be returned to the treatment process at an appropriate point.

17.4 SLUDGE PUMPS AND PIPING

17.4.1 Sludge Pumps

17.4.1.1 Capacity

Provision for varying pump capacity is recommended.

17.4.1.2 Duplicate Units

Duplicate units shall be provided such that with any one pump out of service, the remaining pumps will have capacity to handle the peak flow.

17.4.1.3 Type

Plunger pumps, screw feed pumps, recessed impeller type centrifugal pumps, progressive cavity pumps, or other types of pumps with demonstrated solids handling capability shall be provided for handling raw sludge.

17.4.1.4 Minimum Head

A minimum positive head of 24 inches shall be provided at the suction side of centrifugal-type pumps and is desirable for all types of sludge pumps. Maximum suction lifts shall not exceed 10 feet for plunger pumps.

17.4.1.5 Sampling Facilities

Unless sludge sampling facilities are otherwise provided, quick-closing sampling valves shall be installed at the sludge pumps. The size of valve and piping shall be at least 1½ inches.

17.4.2 Sludge Piping

17.4.2.1 Size and Head

Sludge withdrawal piping should have a minimum diameter of 8 inches for gravity withdrawal and gravity withdrawal and 6 inches for pump suction and discharge lines. Where withdrawal is by gravity, the available head on the discharge pipe should be adequate to provide at least 3.0 feet per second velocity.

17.4.2.2 Slope

Gravity piping shall be laid on uniform grade and alignment. The hydraulic slope of gravity discharge piping shall not be less than 3 percent. Provisions shall be made for cleaning, draining, and flushing discharge lines.

17.4.2.3 Supports

Special consideration shall be given to the corrosion resistance and continuing stability of supporting systems located inside the digestion tank.

17.5 SLUDGE DEWATERING

17.5.1 Sludge Drying Beds

17.5.1.1 Area

In determining the area of sludge drying beds, given to climatic conditions, the character and volume of the sludge to be dewatered, the method and schedule of sludge removal, and other methods of sludge disposal. In general, the sizing of the drying bed may be estimated on the basis of 2.0 ft^2/capita when the drying bed is the primary method of dewatering, and 1.0 ft^2/capita if it is to be used as a back-up dewatering unit.

17.5.1.2 Percolation Type

The lower course of gravel around the underdrains shall be properly graded and shall be 12 inches in depth, extending at least 6 inches above the top of the underdrains. It is desirable to place this in two or more layers. The top layer of at least three inches shall consist of gravel 1/8 to 1/4 inch in size.

a. Sand

The top course shall consist of 6 to 9 inches of clean coarse sand. The finished sand surface shall be level.

b. Underdrains

Underdrains shall be clay pipe, plastic or concrete drain tile at least 4 inches in diameter laid with open joints. Underdrains shall be spaced not more than 20 feet apart. The disposal of the underdrain filtrate is covered in Section 17.6.4.

17.5.1.3 Partially Paved Type

The partially paved drying bed shall be designed with consideration for space requirement to operate mechanical equipmenmt for removing the dried sludge.

17.5.1.4 Walls

Walls shall be watertight and extend 15 to 18 inches above and at least 6 inches below the surface. Outer walls shall be curbed to prevent soil from washing onto the beds.

17.5.1.5 Sludge Removal

Not less than two beds shall be provided and they shall be arranged to facilitate sludge removal. Concrete truck tracks shall be provided for all percolation-type sludge beds. Pairs of tracks for the percolation-type beds shall be on 20 foot centers.

17.5.1.6 Sludge Influent

The sludge pipe to the drying beds shall terminate at least 12 inches above the surface and be so arranged that it will drain. Splash plates for percolation-type beds shall be provided at sludge discharge points.

17.5.2 Sludge Lagoons

Sludge lagoons shall not be substituted for adequate sludge digestion and shall not be approved for use as a sludge volume reduction process except as provided for in 17.3.5.6.

17.5.3 Mechanical Dewatering Facilities

Provision shall be made to maintain sufficient continuity of service so that sludge may be dewatered without accumulation beyond storage capacity. The number of vacuum filters, centrifuges, filter presses, belt filters, or other mechanical dewatering facilities should be sufficient to dewater the sludge produced. Unless other standby facilities are available, adequate storage facilities shall be provided. The storage capacity should be sufficient to handle at least a three-month sludge production.

17.5.3.1 Spare Parts for Mechanical Dewatering Facilities

a. Spare parts shall be available for all mechanical dewatering facilities to replace parts which are subject to wear and breakage.

b. There shall be a back-up vacuum pump and filtrate pump installed for each vacuum filter. It is permissible to have an uninstalled back-up vacuum pump or filtrate pump for every three or less vacuum filters, provided that the installed unit can easily be removed and replaced.

17.5.3.2 Ventilation

Adequate facilities shall be provided for ventilation of dewatering area. The exhaust air should be properly conditioned to avoid odor nuisance.

17.5.3.3 Chemical Handling Enclosures

Lime-mixing facilities should be completely enclosed to prevent the escape of lime dust. Chemical handling equipment should be automated to eliminate the manual lifting requirement.

17.5.4 Drainage and Filtrate Disposal

Drainage from beds or filtrate from dewatering units shall be returned to the sewage treatment process at appropriate points.

17.5.5 Other Dewatering Facilities

If it is proposed to dewater or dispose of sludge by other methods, a detailed description of the process and design data shall accompany the preliminary report or facility plan.

17.6 FINAL DISPOSAL OF SLUDGE

17.6.1 Sludge Disposal on Land

The program of land spreading of sludge must be evaluated as an integral system which includes stabilization, storage, transportation, application, soil, crop, and surface groundwater. The following guidelines were formulated to provide the criteria of municipal sludge disposal and land.

17.6.1.1 General Limitations to be Observed

Disposal of municipal sewage sludge on land shall be in accordance with IAC 121 (455B).

17.6.1.2 Site Selection

By proper selection of the sludge application site, the nuisance ptential and public health hazards should be minimized. Siting restrictions are as stated in IAC 121 (455B). The following items shall be addressed:

a. Land ownership information;
b. Groundwater table and bedrock location;
c. Location of dwellings, road, and public access;
d. Location of wells, springs, creeks, streams, and flood plains;
e. Slope of land surface;
f. Soil characteristics;
g. Climatological information and periods of ground freezing;
h. Land use plan; and
i. Road weight restrictions.

17.6.1.3 Management of Spreading Operation

a. Hauling Equipment

The sludge hauling equipment shall be designed to prevent spillage, odor, and other public nuisance. A paved and drained loading pad should be provided.

b. Valve Control

The spreading tank truck should be provided with a control so that the discharge valve can be opened and closed by the driver while the vehicle is in motion. The spreading valve shall be of the "failsafe" type (i.e., self-closing) or an additional manual stand-by valve shall be employed to prevent uncontrolled spreading or spillage.

c. Spreading Methods

The selection of spreading methods depends on the sludge characteristics, enviornmental factors, and others. Spreading requirements are stated in IAC 121 (455B).

The sewage sludge should be spread uniformly over the surface when tank truck spreading, ridge and furrow irrigation, or other methods are used.

Proposals for subsurface application sludge shall include for review a description of the equipment program for application.

d. Public Access

Public access of the disposal site must be controlled by either positive barriers or remoteness of the site.

17.6.1.4 Monitoring and Reporting

The requirements on the monitoring and reporting of the sludge spreading operation are as outlined in IAC 121 (455B).

17.6.2 Other Sludge Disposal Methods

When other sludge disposal methods, such as incineration and landfill, are considered, a detailed description of the process and design data shall accompany the preliminary report or facility plan. Disposal of sludge in a sanitary landfill shall be in accordance with IAC 103 (455B).

References:

Recommended Standards for Sewage Works, 1978 Edition.
Great Lakes - Upper Mississippi River Board of State Stanitary Engineers (Ten-State Standards)

Process Design Manual for Sludge Treatment and Disposal, 1974
U.S. EPA, Technology Transfer

Wastewater Engineering. 1972 Metcalf. Eddy.

Adopted October 21, 1985

IOWA WASTEWATER FACILITIES DESIGN STANDARDS

CHAPTER 18A

FIXED FILM MEDIA TREATMENT

IOWA WASTEWATER FACILITIES DESIGN STANDARDS

CHAPTER 18A

FIXED FILM MEDIA TREATMENT

18A.1 GENERAL

18A.1.1 Applicability

This chapter is applicable to construction, installation or modification of any disposal system required to obtain a construction permit from this Department under the Iowa Code Section 455B.183 and 900--64.2 of the Iowa Administrative Code.

18A.1.2 Variances [900--64.2(9)"c" I.A.C.]

When engineering justification satisfactory to the executive director is provided substantially demonstrating that variation from the design standards or siting criteria will result in either: at least equivalent effectiveness while significantly reducing costs, or improved effectiveness, such a variation from design standards or siting criteria may be accepted by the executive director.

18A.1.3 Explanation of Terms

The terms "shall" or "must" are used in these standards when it is required that the standard be used. Other terms such as "should" and "recommended" indicate desirable procedures or methods which should be considered but will not be required.

18A.2 PROCESS SELECTION

18A.2.1 Applicability

The fixed film media treatment processes discussed in this chapter include trickling filters and rotating biological contactors (RBC's). These processes can be used for roughing, secondary treatment, nitrification or polishing to treat wastewater which is amenable to biological treatment.

18A.2.2 Specific Process Selection

The fixed film media treatment processes and their modifications may be employed to accomplish varied degrees of removal of suspended solids and reduction of carbonaceous and nitrogenous oxygen demand. Choice of the process most applicable will be influenced by the proposed plant size, type of waste to be treated, treatability of waste, degree and consistency of treatment required and local factors.

18A.3 PRETREATMENT

RBC's and trickling filters must be preceeded by settling tanks or other pretreatment devices which provide for effective removal of grit, debris and excessive oil or grease. Bar screening or comminution are not suitable as the sole means of pretreatment.

18A.4 INDUSTRIAL WASTES

18A.4.1 General

Consideration shall be given to the type and effects of industrial wastes on the treatment process. It may be necessary to pretreat industrial wastes prior to discharge to the sanitary sewer system.

18A.4.2 Prohibited Wastes

The following wastes shall not be discharged to these processes without assessment of their effects upon the treatment process or discharge requirements in accordance with state and federal law:

a. Any toxic chemicals which may inhibit biological or bacteriological processes.

b. Any strong oxidizing agents or disinfectants in quantities sufficient to inhibit the growth of microorganisms.

c. Metal plating wastes or other toxic wastes containing heavy metals and/or toxic or noxious inorganic chemicals, such as cyanide, reduced sulfur compounds, arsenic and selenium.

d. Detergent wastes or other wastes containing excessive phosphorous or surfactants.

e. Plastics, pharmaceutical wastes and/or other synthetic organic chemicals not amendable to biological treatment.

f. Any wastes containing excessive amounts of nonbiodegradable oil and grease or tar.

g. Any acidic or alkaline wastes which because of quantity, strength or unequalized flow may upset the biological process.

h. Any wastes containing in excess of 1 milligram per liter phenols.

i. Any wastes containing radioactive chemicals.

j. Nutrient deficient wastes which cannot meet the normal ratio of 100 BOD_5: 5 Nitrogen: 1 Phosphorous necessary for the maintenance of the biological community. An example would be paper mill wastes.

k. Any wastes that might cause physical deterioration of the filter media, piping or structures.

l. Any other waste which may be defined as an incompatible pollutant.

18A.5 DESIGN INFORMATION

Fixed film media treatment processes shall be designed to provide for reduction in carbonaceous and/or nitrogenous oxygen demand in accordance with water quality standards and objectives for the receiving waters as established by the Department, or to properly condition the wastewater for subsequent treatment processes.

Information to be provided by the design engineer when proposing the use of fixed film media treatment processes shall include the following:

* influent BOD, TSS, TKN, and NH_3-N concentrations
* influent temperature
* wastewater heat loss through the various units
* calculations of expected BOD removal and TKN/NH_3-N removal (if appropriate)
* basis for sizing of units
* recirculation rates (if appropriate)

18A.6 TRICKLING FILTERS

18A.6.1 General

Where existing trickling filters are being utilized in the upgrading of wastewater treatment facilities, or where unusual conditions may exist, this Department may vary from these design criteria provided that adequate engineering justification is submitted.

18A.6.1.1 Types of Processes

Trickling filters shall be classified according to the applied hydraulic and organic loadings at AWW flow. The hydraulic loading is the total volume of

liquid, including recirculation, per unit time per square unit of filter plan surface area. Organic loading is the BOD, including recirculation, per unit time per cubic unit of filter volume. Typical loadings for the various classifications of filters are summarized in Table 1.

TABLE 1 TYPICAL DESIGN CRITERIA

Operating Characteristics	Classification of Filter				
	Low or Standard Rate	Intermediate Rate	High Rate	Super Rate	Roughing
Type of Media	Rock	Rock	Rock or Manufactured	Manufactured	Rock or Manufactured
Hydraulic loading:					
gpd/sq. ft.	25-90	90-230	230-900	350-2,100	700-4,200
gpm/sq. ft.	0.017-0.063	0.063-0.160	0.160-0.625	0.243-1.458	0.486-2.917
Organic loading:					
lb BOD/1,000 cu. ft./day	5-25	15-30	25-300	Up to 300	100-500
Depth (ft)	6-8	6-8	3-8	10-40	3-20
Typical BOD removal (%)	80-85	50-70	65-80	65-85	40-65

Note: The BOD removal credits allowed will be based upon the calculations submitted.

18A.6.2 Hydraulics

18A.6.2.1 Distribution

a. The wastewater shall be distributed over the filter by rotary distributors or other suitable devices which will ensure uniform distribution to the surface area under all design flow conditions.

b. For rotary type distributors, a minimum head of 24 inches between low water level in the siphon chamber and the center of the arms is required or a similar allowance shall be added to pumping head requirements.

c. For rotary type distributors, a minimum clearance of six inches between media and distributor arms shall be provided.

18A.6.2.2 Piping System

The piping, pumps and distribution system must be capable of handling the PHWW flow, or other flows plus recirculation if the total of such flows is greater than PHWW flow.

18A.6.3 Media

18A.6.3.1 Manufactured Media

a. Description

Manufactured media is the term used to describe media made from plastic or other material (such as wood), as distinguished from rock media.

b. Quality

Manufactured media shall be resistant to ultraviolet degradation, disintegration, erosion, aging, all common acids, alkalies and solvents, organic compounds, and fungus and biological attack. Manufactured media shall be durable and insoluble in sewage.

c. Depth

Manufactured filter media depth shall not exceed 40 feet.

18A.6.3.2 Rock Media

a. Quality

The media shall be durable, resitant to spalling or flaking and relatively insoluble in sewage. The top 18 inches shall have a loss by the 20-cycle, sodium sulfate soundness test of not more than 10 percent, as prescribed by ASCE Manual of Engineering Practice, Number 13. The balance is to pass a 10-cycle test using the same criteria. Slag media shall be free from iron.

b. Depth

Rock and/or slag filter media depths shall not exceed 10 feet.

c. Size and Grading

Rock, slag and similar media should not contain more than 5 percent by weight of pieces whose longest dimension is three times the least dimension.

They shall be free from thin, elongated and flat pieces, dust, clay, sand or fine material and shall conform to the following size and grading when mechanically graded over vibrating screens with square openings.

Passing 4-1/2 inch screen - 100% by weight

Retained on 3 inch screen - 95-100% by weight

Passing 2 inch screen - 0.2% by weight

Passing 1 inch screen - 0.1% by weight

18A.6.4 Underdrainage System

18A.6.4.1 Arrangement

The underdrainage system shall cover the entire floor of the filter. Inlet openings into the underdrains shall have a total area equal to at least 15 percent of the surface area of the filter.

18A.6.4.2 Hydraulic Capacity and Ventilation

The underdrains shall have a minimum slope of 1 percent. Effluent channels shall be designed to produce a minimum velocity of 2 feet per second at AWW flow.

The underdrainage system, effluent channels, and effluent pipe shall be designed to permit free passage of air. The sizes of drains, channels, and pipes shall be such that not more than 50 percent of their cross-sectional area will be submerged under the MWW flow, including proposed or possible future recirculated flows.

Consideration should be given to the use of forced ventilation for deep manufactured media filters or filters with high organic loadings.

18A.6.4.3 Flushing

Provision shall be made for flushing the underdrains. In small filters, use of a peripheral head channel with vertical vents is acceptable for flushing purposes.

18A.6.5 Special Features

18A.6.5.1 Covers

Covers shall be provided for all new filter installations. Covers shall be removable or shall be designed to provide adequate clear space for maintenance and for removal and replacement of equipment and media.

Covers shall be constructed of suitable corrosion resistant materials. Windows or simple louvered mechanisms which can be opened in the summer and closed in the winter shall be installed to provide adequate ventillation.

Non-metalic covers shall be firmly reinforced with corrosion resistant metal at points of attachment, movement and wear, including windows or ventilation ports, doors and base flanges where attached to walls or foundations. All hardware for ports, windows and doors shall be of corrosion resistant metal; plastic will not be acceptable.

18A.6.5.2 Recirculation

The piping system shall be designed for recirculation as required to achieve the design removal efficiency and maintain adequate surface wetting rates. The recirculation rate shall be variable and subject to plant operator control.

18A.6.5.3 Recirculation Measurement

Facilities shall be provided to permit measurement of the recirculation rate.

18A.6.6 Rotary Distributor Seals

Mercury seals are not permitted.

18A.6.7 Unit Sizing

Required volumes of filter media should be no less than those given in Section 18A.6.1.1, Table 1. The unit sizing shall be verified by utilizing an applicable equation from the literature (such as ASCE Manual of Practice No. 36, standard engineering texts or research literature).

18A.6.8 Activated Filters

Typical values for organic loadings to the filter should range from 100 to 350 lb BOD/1,000 cubic feet of filter media (4,300 to 15,000 pounds BOD per acre foot per day) and the hydraulic wetting rate should range from 1.0 to 5.5 gpm/sq.ft. Criteria for media should be in accordance with Table 1, Section 18A.6.1.1 and Section 18A.6.3.1. The aeration basin size and oxygen requirements should be estimated in accordance with Chapter 18B "Activated Sludge Biological Treatment". Calculations of mixed liquor suspended solids should consider the influent suspended solids and the solids sloughing from the filter in addition to growth of activated sludge due to removal of BOD.

18A.7 ROTATING BIOLOGICAL CONTACTORS

18A.7.1 Surface Area

a. Standard Density: Standard density media is defined as media with a surface area of 100,000 to 128,250 sq.ft. for a typical modular unit. A typical modular RBC unit has a maximum shaft length of approximately 27 feet with 25 feet occupied by media. Maximum media diameter is 12 feet.

b. High Density: High density media is defined as media with a surface area of 138,000 to 180,000 sq.ft. for a typical modular unit. (If typical modular units with surface areas between 128,250 and 138,000 sq.ft. become available, a determination will be made on a case-by-case basis on whether they are to be classified as standard density or high density media.)

18A.7.2 Accessibility

Access shall be provided for the repair or replacement of the media or shafts or entire RBC units. If it is proposed to use portable hoisting equipment for removal or replacement of units, the arrangement shall be such that the hoisting equipment can be located directly adjacent to any unit to be removed.

18A.7.3 Enclosures

RBC's shall be covered to protect the biological growth from cold temperatures and excessive loss of heat from the wastewater.

If individual enclosures are provided they shall be constructed of a suitable corrosion resistant material. Windows or simple louvered mechanisms which can be opened in the summer and closed in the winter shall be installed to provide adequate ventilation. The enclosure shall be adequately insulated to minimize heat loss.

Non-metalic enclosures shall be firmly reinforced with corrosion resistant metal at points of attachment, movement and wear, including windows or ventilation ports, doors, access hatches and base flanges where attached to foundations. All hardware for ports, windows, doors and access hatches shall be of corrosion resistant metal; plastic will not be acceptable.

All enclosures shall provide media inspection and shaft removal capabilities. If drive mechanisms and bearings are within the enclosures, properly sized and located access openings shall be provided for maintenance and repair.

If multiple RBC's are to be housed in a permanent structure or building, provision shall be made for complete removal of the roof over each unit to permit replacement of the unit, or other suitable means shall be provided for replacement of entire units without dismantling permanent portions of the building. The provisions of Section 18A.7.2 shall apply.

There should be adequate consideration of heating and ventilation requirements to control excess condensation and provide sufficient oxygen under both summer and winter conditions. Motors, control centers, lighting, electrical gear and ventilation equipment should be adequately designed to withstand the possible aggressive environment.

18A.7.4 Design Considerations

18A.7.4.1 Dewatering

The design shall provide for separate dewatering capabilities for each tank, with the flow being returned to the plant for adequate treatment.

18A.7.4.2 Rotation

Variable speed capability should be considered for all mechanical drive units to improve overall plant performance.

Provisions shall be made on mechanical drive units for sustained periods (three-four days) of reverse rotation to shear excess biomass without damage to the RBC units or associated equipment. This shall include the provision of anchored radial support arms for the drives for reverse rotation.

18A.7.4.3 Staging

Each RBC facility shall include at least two parallel trains with a minimum of two stages per train.

For smaller facilities, staging may be provided by installing baffles in the tank. The baffles shall be removable and shall be constructed such that solids deposition within the tank will not take place.

Standard density media shall be used in the first two stages of an RBC train.

18A.7.4.4 Weight Measurement

All units shall be equipped with suitable means for measuring the total weight of the shaft, media and biofilm at any time.

18A.7.4.5 Flow Control

The RBC design shall incorporate adequate flow control devices to insure that:

a. Flow is evenly divided among all trains in the system and flow to each train can be measured individually.

b. Flow is evenly distributed to prevent short-circuiting in each tank.

c. Solids shall be kept in suspension in flow splitter boxes.

18A.7.4.6 Other Design Requirements

Wastewater temperatures shall be taken into account during design, since available data indicate that organic removal and nitrification rates diminish at wastewater temperatures below 55°F.

The RBC system shall be designed to maintain a positive DO level in all stages.

Means for removing excess biofilm growth shall be provided, such as air stripping or chemical additives (in addition to rotation reversal on mechanical drive units).

18A.7.4.7 Other Design Recommendations

Periodic high organic loadings may require suplemental aeration in the first stage.

Evaluation of flow equalization vs. additional RBC media surface area is recommended when consistently low ammonia nitrogen levels are required in the effluent.

Providing power factor correction for all RBC mechanical and air drive systems should be considered.

High efficiency motors and drive equipment should be considered.

Consideration should be given to the provision of sampling points at the influent and effluent end of each RBC unit.

18A.7.5 Flexibility

The following operational and control strategies should be considered to provide adequate flexibility in process control:

a. Variable rotational speeds.

b. Positively controlled alternate flow distribution systems, such as step feed.

c. Positive air flow metering and control to each shaft when air drive units are used.

d. Recirculation of secondary clarifier effluent.

18A.7.6 Organic Load

The maximum loading on any stage having standard density media shall not exceed 3 lb. soluble BOD_5/day/1,000 sq.ft. Loading shall not exceed 2.0 lb. soluble BOD_5/day/1,000 sq.ft. for any high density media unit.

18A.7.7 Flow Equalization

Flow equalization should be considered if the MWW flow exceeds the AWW flow by a factor of more than 2.5.

18A.7.8 Design for Nitrification

Effluent concentrations of ammonia nitrogen from the RBC process designed for nitrification are affected by diurnal load variations. Therefore, it may be necessary to increase the design surface area proportional to the ammonia nitrogen diurnal peaking rates to meet effluent limitations. An alternative is to provide flow equalization sufficient to ensure process performance within the required effluent limitations.

WASTEWATER FACILITIES DESIGN STANDARDS

CHAPTER 18B

ACTIVATED SLUDGE BIOLOGICAL TREATMENT

18B.5 RETURN SLUDGE EQUIPMENT

18B.5.1 RETURN SLUDGE RATE

18B.5.2 RETURN SLUDGE PUMPS

18B.5.3 RETURN SLUDGE PIPING

18B.5.4 WASTE SLUDGE CONTROL

IOWA WASTEWATER FACILITIES DESIGN STANDARDS

CHAPTER 18B

ACTIVATED SLUDGE BIOLOGICAL TREATMENT

18B.1 GENERAL

18B.1.1 Applicability

This chapter is applicable to construction, installation or modification of any disposal system required to obtain a construction permit from this Department under the Iowa Code Section 455B.183 and 900--64.2 of the Iowa Administrative Code.

18B.1.2 Variances [900--64.2(9)"c" I.A.C.]

When engineering justification satisfactory to the executive director is provided substantially demonstrating that variation from the design standards or siting criteria will result in either: at least equivalent effectiveness while significantly reducing cost, or improved effectiveness, such a variation from design standards or siting criteria may be acceptable by the executive director.

18B.1.3 Explanation of Terms

The terms "shall" or "must" are used in these standards when it is required that the standard be used. Other terms such as "should" and "recommended" indicate desirable procedures or methods which should be considered but will not be required.

18B.2 PROCESS SELECTION

18B.2.1 Applicability

The activated sludge process, and its various modifications, may be used to treat wastewater which is amenable to biological treatment.

18B.2.2 Operational Requirements

The activated sludge process requires close attention and competent operating supervision. Facilities and appurtenances, including suitable laboratory apparatus, for routine control and testing shall be provided at all activated sludge plants.

18B.2.3 Specific Process Selection

The activated sludge process and its modifications may be employed to accomplish varied degrees of removal of suspended solids and reduction of carbonaceous and nitrogenous oxygen demand. Choice of the process most applicable will be influenced by the proposed plant size, type of waste to be treated, treatability of waste, degree and consistency of treatment required and local factors. All designs shall provide for flexibility in

operation. All plants over 1 MGD at AWW flow should be designed to be operable in more than one mode. Seasonal organic loadings and significant wet weather flow increases are factors that affect mode of operation.

18B.3 PRETREATMENT

When primary settling tanks are not used, effective removal or exclusion of grit, debris, excessive oil or grease, and comminution or screening of solids shall be accomplished prior to the activated sludge process.

Where primary settling is used, it may be desirable to provide for discharging raw sewage directly to the aeration tanks to facilitate plant startup and initial operation.

18B.4 AERATION

18B.4.1 Basis of Design

In addition to the requirements of Chapter 11, the basis of design for the proposed activated sludge process shall be prepared by the engineer and included in the facilities plan or submitted under separate cover for review and approval. The basis of design shall include a discussion of all design parameters used in sizing activated sludge treatment facilities including the following:

1. Mode of operation including discussion of process flexibility.

2. Influent wastewater characteristics and flows. Flows are to include ADW, AWW, MWW, and PHWW flows.

3. Temperature range of wastewater, including estimates of temperature losses through the treatment plant and subsequent effect on removal efficiencies.

4. Pretreatment of the waste.

5. Effects of variable hydraulic and organic loadings applied to the aeration basins and secondary clarifiers, particularly variations resulting from infiltration/inflow to the system.

6. Anticipated mixed liquor suspended solids concentration to be maintained in the aeration basin.

7. Aeration time.

8. Oxygen transfer and mixing requirements at ADW, AWW, and MWW flows.

9. Sludge recirculation and wasting (ranges and average values), including proposed method of control and anticipated typical operating mode.

10. Design calculations for oxygen requirements, blower or aerator capacity, aeration basin and clarifier sizing, clarifier solids loading, and treatment efficiency shall be submitted for review.

18B.4.2 Capacities and Permissible Loadings

The size of the aeration tank shall be determined by full scale experience, pilot plant studies, and/or rational calculations based mainly on food to microorganism ratio, solids retention time, and mixed liquor suspended solids levels. Other factors such as size of treatment plant, diurnal load variations, and degree of treatment required shall also be considered.

Table 1 represents typical design parameters for domestic wastewater. Design parameters differing from those in Table 1 shall reference actual operating plants or pilot plant studies. The design parameters in Table 1 apply to plants receiving peak to average diurnal organic load ratios ranging from about 2:1 to 4:1. The Department may approve organic loading rates that exceed those specified in Table 1 if flow equalization is provided to reduce the diurnal peak organic load.

Single stage of two stage activated sludge systems designed to remove ammonia shall maintain adequate alkalinity concentrations and a pH level between 7.2 and 8.4. Chemical feed equipment shall be provided if necessary. Flow equalization shall be considered where necessary to limit TKN peaks resulting from industrial wastes. For two stage systems, carbonaceous BOD_5 concentration to the second stage should be limited to 20-50 mg/l. A bypass around the first stage shall also be provided to allow discharge of raw or primary settled sewage to the second stage aeration tank as needed for process control.

Due to the dilute nature of some design load concentrations, it may be necessary to require a minimum hydraulic detention time to insure that the colloidal, finely suspended and dissolved organics are adsorbed by the activated sludge. This minimum hydraulic detention time shall be based on the design flow (AWW) plus the return sludge flow and shall not be less than 60 minutes.

18B.4.3 Aeration Tanks

18B.4.3.1 Multiple Units

Multiple units shall be provided in accordance with Chapter 14 of these Standards. Tanks shall be designed so that each tank may be dewatered and operated independently.

TABLE 1

TYPICAL AERATION TANK LOADINGS AND DESIGN PARAMETERS

Process	Solids Retention* Time - Days	Maximum Aeration Tank Organic Loading* lb. BOD_5/1000 cu. ft./day	F/M Ratio* lb. BOD_5/lb. MLVSS/day	MLSS - mg/liter
Step Aeration, Complete Mix and Conventional	6 - 15	40	0.2 - 0.5	1,000 - 3,000
Contract Stabilization	6 - 15****	50****	0.2 - 0.6****	1,000 - 3,000
Extended Aeration	20 - 30	15	.05 - 0.1	3,000 - 5,000
Combined Carbon Oxidation- Nitrification	15 - 25	15	.08 - .16	2,000 - 5,000
Carbonaceous Stage of Separate Stage Nitrification	3 - 10	70	0.3 - 0.8	1,000 - 2,500
Nitrification Stage of Separate Stage Nitrification	15 - 25	10**	.05 - .20***	1,000 - 3,000

*Maximum - 30 day BOD_5 loading
**Lb. NH_3-N/1000 cu. ft./day
***Lb. NH_3-N/lbs. MLVSS/day
****Total aeration capacity includes both contact and reaeration capacities.

18B.4.3.2 Tank Geometry

Tank dimensions shall not inhibit effective mixing or utilization of air. Liquid depths should not be less than 10 feet or more than 30 feet. The shape of the tank and the installation of aeration equipment shall provide for positive control of short-circuiting through the tank.

18B.4.3.3 Freeboard and Froth Control

All aeration tanks shall have a freeboard of not less than 18 inches. Suitable water spray systems or other approved means of froth and foam control shall be provided if excessive foaming is anticipated. Otherwise, provisions for future installation of froth or foam control should be considered.

18B.4.3.4 Inlet and Outlet Control

Inlets and outlets for each aeration tank unit shall be suitably equipped with valves, gates, stop plates, weirs or other devices to permit balancing, proportioning and splitting of the flow to and from any unit and to maintain reasonably constant liquid level. The hydraulic elements of the system shall permit the peak hydraulic load to be carried with any single aeration tank out of service. This shall be done in accordance with the requirements of Section 14.4.9.3 of these design standards.

18B.4.3.5 Conduits

Channels and pipes carrying liquids with solids in suspension shall be designed to maintain self-cleansing velocities or shall be agitated to keep such solids in suspension at all design rates of flow. Provisions should be made to drain segments of channels when not in use.

18B.4.3.6 Winter Protection

Protection against freezing shall be considered during the design phase to ensure continuity of operation and performance in cold weather. Maximum utilization of earthen bank insulation should be considered to minimize heat losses.

18B.4.4 Aeration Equipment

18B.4.4.1 General

Aeration requirements depend upon mixing energy, BOD and nitrogen loading, degree of treatment, oxygen uptake rate, mixed liquor suspended solids concentration and sludge age. Aeration equipment shall be capable of maintaining a dissolved oxygen concentration of 2.0 mg/l in the aeration tanks at all times. Energy transfer shall be sufficient to maintain the mixed liquor solids in suspension.

In the absence of experimentally determined values, the design oxygen requirements for all activated sludge processes shall be 1.1 lbs. oxygen/lb. BOD_5 per day at the MWW flow plus 50% of the difference between the MWW flow and four-hour peak above that rate applied to the aeration tanks with the exception of the extended aeration process, for which the value shall be 1.8 lbs. oxygen/lb. peak 12-hour BOD_5.

In the case of nitrification, the oxygen requirement for oxidizing ammonia must be added to the above requirement for carbonaceous BOD_5 removal. The nitrogenous oxygen demand (NOD) shall be taken as 4.6 times the daily TKN content of the influent at MWW flow.

Additional oxygen shall supplied to meet the oxygen demands due to recycle flows -- anaerobic digester supernatant, belt press filtrate, elutriates, etc.

Careful consideration should be given to maximizing oxygen utilization per unit power input. Unless flow equalization is provided, consideration should be given to designing the aeration system to match the diurnal organic load variations while economizing on power input.

18B.4.4.2 Diffused Air System

a. The design of the diffused air system to provide the oxygen requirements shall be prepared using calculations incorporating such factors as:

   1. Tank depth;

   2. Alpha factor of wastes (taking into consideration aeration device characteristics and tank geometry);

   3. Beta factor of waste;

   4. Certified aeration device transfer efficiency;

5. Minimum aeration tank dissolved oxygen concentrations;

6. Critical wastewater temperature; and

7. Altitude of plant.

Treatment plants where the waste contains higher than 10% of industrial wastes shall experimentally determine the alpha and beta factors and shall have test results calculations submitted to justify the factors. The basis of design shall include detailed computations for all diffused air systems taking into account the factors listed above.

b. The specified capacity of blowers or air compressors, particularly centrifugal blowers, should take into account that the air intake temperature may reach 104°F or higher and the pressure may be less than normal.

The specified capacity of the motor drive should also take into account that the intake air may be -20°F or less and may require oversizing of the motor or a means of reducing the rate of air delivery to prevent overheating or damage to the motor.

c. Multiple blowers shall be provided and so arranged and in such capacities as to meet the maximum total air demand with the single largest unit out of service. The design shall also provide for the ability to adjust air flow in proportion to the load demand of the plant. Aeration equipment shall be easily adjustable in increments and shall maintain solids suspension within these limits.

d. The air diffusion piping and diffuser system shall be capable of delivering air without excessive head loss with all available blowers on. Air diffusion piping includes all piping from the blower to the aeration basin. The spacing of diffusers must meet through the oxygenation requirements through the length of the channel or tank and should be designed to facilitate adjustments of their spacing without major revision to air header piping. Diffusers in any single assembly shall have substantially uniform pressure loss.

e. Individual assembly units of diffusers shall be equipped with control valves, preferably with indicator markings for throttling and for complete shut off. The arrangements of diffusers

shall also permit their removal for inspection, maintenance and replacement without dewatering the tank and without shutting off the air supply in the tank, unless the dewatering aeration basins are 50% or less of the total aeration basin capacity.

f. Air filters shall be provided in numbers, arrangement and capacities to furnish at all times an air supply sufficiently free from dust to prevent clogging of the diffuser system used. Air filters will not be required where coarse bubble diffusers are used.

18B.4.4.3 Mechanical Aeration Systems

a. Oxygen Transfer Performance

The mechanisms and drive unit shall be designed for the expected conditions in the aeration tank in terms of the power performance. Certified testing shall verify mechanical aerator performance.

b. Design Requirements

The mechanical aeration system shall:

1. Maintain a minimum of 2.0 mg/l of dissolved oxygen in the mixed liquor at all times throughout the tank or basin.

2. Provide a liquid waste turnover time such that a minimum velocity of 1.0 fps is maintained at all points in the basin to provide adequate mixing and to prevent deposition of solids.

3. Be protected from excessive ice coating in inclement weather.

4. Include multiple unit installation designed to meet the maximum oxygen demand with the largest unit out of service. Provision for rapid replacement must be provided. The design should also provide for varying the amount of oxygen transferred in proportion to the load demand on the plant. If depth of submersion is an important criteria, the aeration system shall be adjustable or the basin levels shall be readily controllable with regard to depth.

5. Spray protection in the form of mist shields or high walls around tanks should be considered.

18B.5 RETURN SLUDGE EQUIPMENT

18B.5.1 Return Sludge Rate

The minimum permissible return sludge rate of withdrawal from settling tank is a function of the concentration of suspended solids in the mixed liquor entering it, the sludge volume index of these solids and the length of time these solids in the final settling tanks may be deleterious to both the aeration and sedimentation phases of the activated sludge process, the rate of sludge return expressed as a percentage of the AWW design flow of sewage shall be variable between limits of 25 to 100 percent. This requirement shall apply to all activated sludge processes except extended aeration, single stage nitrification and the nitrification stage of separate stage nitification where the return sludge rate shall be variable from 50 to 150 percent.

18B.5.2 Return Sludge Pumps

If motor driven return sludge pumps are used, the maximum return sludge capacity shall be obtained with the largest pump out of service. The rate of sludge return shall be varied by means of variable speed motors or drives or other suitable means. A positive head should be provided on pump sunctions. Pumps shall have at least three inch suction and discharge openings.

If air lift pumps are used for returning sludge from each settling tank, no standby unit shall be required provided that the design of the air lifts is such as to facilitiate their rapid and easy cleaning. Air lifts should be at least three inches in diameter.

18B.5.3 Return Sludge Piping

Suction and discharging piping should be at least four inches in diameter and should be designed to maintain a velocity of not less than 1.0 feet per second when return sludge facilities are operating at normal (25 - 150%) return sludge rates. Devices for observing, measuring, sampling and controlling return activated sludge flow from each settling tank shall be provided, as outlined in Section 16.4.2.4.

18B.5.4 Waste Sludge Control

Waste sludge control facilities should have a maximum capacity of not less than 25 percent of the AWW flow and function satisfactorily at rates of 0.5 percent of average dry weather flow or a minimum of 10 gallons per minute, whichever is larger. Means for observing, measuring, sampling and controlling waste activated sludge flow shall be provided. It is desirable to have separate waste sludge equipment so that sludge return is not interrupted.

Adopted April 25, 1979
Amended May 20, 1986
Amended May 20, 1987

IOWA WASTEWATER FACILITIES DESIGN STANDARDS

CHAPTER 18C

WASTEWATER TREATMENT PONDS (LAGOONS)

18C.3.6 Geology

18C.3.6.1 Karst Features

18C.3.6.2 Bedrock Separation

18C.3.7 Flooding Protection

18C.4 DESIGN LOADINGS

18C.4.1 Hydraulic

18C.4.1.1 Controlled Discharge Ponds

18C.4.1.2 Aerated Ponds

18C.4.1.3 Other Waste Sources

18C.4.2 Organic

18C.4.3 Industrial Wastes

18C.5 CONTROLLED DISCHARGE POND DESIGN

18C.5.1 Number of Cells

18C.5.1.1 Two Cells

18C.5.1.2 Three Cells

18C.5.2 Organic Loading

18C.5.2.1 Two Cells

18C.5.2.2 Three or More Cells

18C.5.3 Hydraulic Storage

18C.5.3.1 Entire System

18C.5.3.2 Secondary Cells

18C.5.3.3 Greater Times

18C.5.4 Liquid Depths

18C.5.4.1 Primary Cells

18C.5.4.2 Secondary Cells

18C.7 POND CONSTRUCTION DETAILS

18C.7.1 Pond Shape

18C.7.1.1 General

18C.7.1.2 Controlled Discharge Ponds

18C.7.1.3 Aerated Facultative Ponds

18C.7.2 Embankments and Dikes

18C.7.2.1 Material

18C.7.2.2 Top Width

18C.7.2.3 Maximum Slopes

18C.7.2.4 Minimum Slopes

18C.7.2.5 Freeboard

18C.7.2.6 Design Depth

18C.7.2.7 Erosion Control

18C.7.2.8 Additional Erosion Protection

18C.7.2.9 Seeding

18C.7.3 Pond Bottom

18C.7.3.1 Soil

18C.7.3.2 Seal

18C.7.3.3 Over-Excavation

18C.7.3.4 Uniformity

18C.7.4 Influent Lines

18C.7.4.1 Material

18C.7.4.2 Influent Structure

18C.7.4.3 Flow Distribution

18C.7.4.4 Location

18C.7.4.5 Point of Discharge

18C.7.4.6 Influent Discharge Apron

18C.7.5 Control Structure

18C.7.6 Pond Piping

18C.7.6.1 Material

18C.7.6.2 Hydraulic Capacity

18C.7.6.3 Interconnecting Piping

18C.7.6.4 Controlled Discharge Drawdown Structure Piping

18C.7.6.5 Aerated Facultative Pond Discharge Structure Piping

18C.7.7 Prefilling

18C.7.8 Cell Dewatering

18C.8 FLOW MEASUREMENT

18C.8.1 Influent

18C.8.2 Effluent

18C.8.3 Small Facilities

18C.8.4 Equipment Protection

18C.8.5 Structures

18C.9 DISINFECTION

18C.9.1 Application

18C.9.2 Location

18C.10 MISCELLANEOUS

18C.10.1 Fencing

18C.10.2 Access

18C.10.3 Warning Signs

18C.10.4 Groundwater Monitoring

18C.10.5 Laboratory Equipment

18C.10.6 Pond Level Gauges

18C.10.7 Service Building

APPENDIX

18C-A	Derivation of Reaction Formula
18C-B	Lagoon Flow Schematics for Piping and Reliability
18C-C	Typical 2-Cell Lagoon Layout
18C-D	Typical 3-Cell Lagoon Layout
18C-E	Typical 4-Cell Lagoon Layout

IOWA WASTEWATER FACILITIES DESIGN STANDARDS

CHAPTER 18C

WASTEWATER TREATMENT PONDS (LAGOONS)

18C.1 GENERAL

18C.1.1 Applicability

This chapter is applicable to construction, installation or modification of any lagoon type disposal system required to obtain a construction permit from this Department under the Iowa Code, Section 455B.45, and 900--64.2, of the Iowa Administrative Code (I.A.C.).

18C.1.2 Variances [900--64.2(9)"c", "d" and "e", IAC]

c. Variances from the design standards and siting criteria which provide in the judgment of the department for substantially equivalent or improved effectiveness may be requested when there are unique circumstances not found in most projects. The executive director may issue variances when circumstances are appropriate. The denial of a variance may be appealed to the commission.

d. When reviewing the variance request, the executive director may consider the unique circumstances of the project, direct or indirect environmental impacts, the durability and reliability of the alternative, and the purpose and intent of the rule or standard in question.

e. Circumstances that would warrant consideration of a variance (which provides for substantially equivalent or improved effectiveness) may include the following:

(1) The utilization of new equipment or new process technology that is not explicitly covered by the current design standards.

(2) The application of established and accepted technologies in an innovative manner not covered by current standards.

(3) It is reasonably clear that the conditions and circumstances which were considered in the adoption of the rule or standard are not applicable for the project in question and therefore the effective purpose of the rule will not be compromised if a variance is granted.

Where existing ponds are being utilized in the upgrading of wastewater treatment facilities, or where unusual conditions may exist, this Department may vary from these design criteria provided that adequate engineering justification is submitted which substantially demonstrates that variations will result

in either 1) at least equivalent effectiveness while significantly reducing costs, or 2) improved effectiveness.

18C.1.3 Explanation of Terms

The terms "shall" or "must" are used in these standards when it is required that the standard be used. Other terms such as "should" and "recommend" indicate desirable procedures or methods which should be considered but will not be required.

18C.1.4 Scope of Standard

These design criteria deal specifically with the design of earthen wastewater treatment pond (lagoon) systems. The main emphasis is placed on wastewater treatment pond systems which will serve as the sole wastewater treatment system for domestic type wastewater. The use of wastewater treatment ponds as supplementary treatment in combination with other treatment systems shall require evaluation on a case-by-case basis.

Wastewater treatment pond systems shall be considered as those systems designed to achieve secondary treatment effluent limitations by reducing the 5-day biochemical oxygen demand (BOD_5) without maintaining all biological solids in suspension. Systems considered shall be the 180 day, controlled discharge pond and the flow-through aerated facultative pond systems. Flow-through photosynthetic pond systems shall not be considered as a viable treatment alternative for achieving secondary effluent limitations.

The term "pond" is used in these design criteria to include the total earthen treatment facility and the term "cell" is used to designate the individual units of the total facility.

18C.2 SUPPLEMENT TO ENGINEER'S REPORT

The engineer's report shall contain pertinent information on location, geology, soil conditions, area for expansion and any other factors that will affect the feasibility and acceptability of the proposed project. The following information must be submitted in addition to that required in Chapter 11 of the Design Standards.

18C.2.1 Area Development

The location of all residences, commercial developments, parks, recreational areas and water supplies, including a log of each well (if available) within one-quarter mile of the proposed pond shall be included in the engineer's report. If a well log is not available, or is incomplete, all available details of construction such as well and casing depths, casing material, pumping rate, static and pumping water levels, etc. shall be provided.

18C.2.2. Area Planning

Any applicable land use zoning adjacent to the proposed pond site shall be included. The project shall conform with local and regional planning. Clearance from the appropriate planning agencies shall be included with the engineer's report when required (such as for grant funded projects).

18C.2.3 Site Description

A description, including maps showing elevations and contours of the site and adjacent area shall be provided. Due consideration shall be given to additional treatment units and increased waste loadings in determining land requirements. Current U.S. Geological Survey and Soil Conservation Service Maps may be considered adequate for preliminary evaluation of the proposed site.

18C.2.4 Field Tile

The location, depth and discharge point(s) of any field tile in the immediate area of the proposed site shall be identified.

18C.2.5 Soils Testing

Data from soil borings conducted by a qualified organization normally engaged in soil testing activities to determine subsurface soil characteristics and groundwater characteristics (including elevation and flow) of the proposed site and a discussion of their effect on construction and operation of the pond shall be submitted. The number and location of the soil borings will vary on a case-by-case basis as determined by the designing engineer, and accepted by this Department. The following are minimum requirements:

a. A minimum number of three borings will be required for ponds 0.5 acres or less, and four or more for ponds larger than 0.5 acres. One additional boring per acre is recommended for ponds larger than four acres where borings show inconsistent soils.

b. Location emphasis shall be placed at points of deepest excavation; however, a true cross sectional indication of substrata characteristics for the entire site must be provided.

c. All borings should be taken to a minimum depth of ten feet below the bottom elevation of the pond.

d. At least one boring shall be taken to a depth of 25 feet below the bottom elevation of the pond or into bedrock, whichever is shallower. If the boring of 25 feet encoun-

ters a water bearing strata, each of the required borings shall also extend to the water bearing strata, with a maximum depth of 25 feet.

For sites where bedrock is encountered, samples at five foot intervals from one appropriate boring are to be submitted along with boring logs, boring locations and the soils report on the site. All borings are to be backfilled with excavated material except that those borings encountering sand, gravel or a water bearing strata shall be backfilled with a mixture of natural soil and bentonite.

e. Sufficient soil borings shall be taken at borrow pit areas to establish the consistency and nature of the material as it relates to the use of this borrow material within the lagoon construction. The depths of the borings are optional, but they should be at least one foot below the lowest borrow layer.

f. The selection of a soil sealant, as well as the amount required to meet percolation standards shall be determined prior to construction by laboratory permeameter testing. Such testing shall be done by the consulting engineering firm or by an independent soil testing laboratory. Results provided by a sealant supplier laboratory are not acceptable.

A procedure should be used that is similar to that submitted by C.L. Sawyer of the Bureau of Public Roads and found on pages 141-145 of ASTM's Fifth Edition of Special Procedures for Testing Soil and Rock for Engineering Purposes (ASTM's STP479, published in 1970). Also acceptable are similar methods which deal with the evaluation of relatively tight systems using falling-head permeameters.

Testing of the seal subsequent to construction shall be done in accordance with Section 18C.7.3.2.

18C.2.6 Water Supply Characteristics

Sulfate content of the basic water supply shall be determined.

18C.3 LOCATION

18C.3.1 Site Inspection

Proposed wastewater treatment pond sites must be inspected as required by 900--64.2(2) and meet the separation distances under 900--64.2(3) of the Iowa Administrative Code. The procedure and minimum information required under 900--60.4(1)"c" of the Iowa Administrative Code must be complied with before a site survey will be conducted.

18C.3.2 Future Expansion

Consideration should be given in the selection of the pond site to the possibility of expansion or addition of future treatments units as may be necessary to meet applicable discharge standards.

18C.3.3 Prevailing Winds

If practical, the pond should be located so that prevailing winds will be in the direction of uninhabited areas.

18C.3.4 Surface Runoff

Provisions shall be made to divert all stormwater area runoff from entering the pond, thus protecting the pond from excessive hydraulic loadings, inner-embankment erosion, and siltation.

Storm sewers or other conveyances for storm water shall not be located under lagoon cells. Storm sewers may be placed within the dike itself if the following conditions are met:

a. The flow line (invert) of the storm sewer is not more than three feet (3') below the high water level in the adjacent lagoon cells,

b. The horizontal distance from the centerline of the storm sewer to the adjacent lagoon cell water surface is at least eight feet (8'), and

c. The storm sewer is centered in the dike in such a manner that excavation of the storm sewer could be accomplished without disturbing the inner side or sides (sloped embankments) of the dike.

Erosion protection shall be provided for all external stormwater ditches as needed to prevent erosion of the outer pond embankments.

18C.3.5 Hydrology

18C.3.5.1 Horizontal Separation

Construction of the pond in close proximity to water supplies and other facilities vulnerable to contamination should be avoided, but in no case shall the separation distances be less than the minimum requirements of subrule 900--64.2(3) of the Iowa Administrative Code.

18C.3.5.2 Vertical Separation

A minimum separation of four feet between the pond seal and the maximum groundwater table is recommended; however, in no case shall the top of the pond seal be below the maximum groundwater table. Where the groundwater table occurs as a result of a perched groundwater condition, see Section 18C.3.5.3.

If the maximum anticipated groundwater table is less than two feet below the bottom of the lagoon, the lagoon shall be provided with a synthetic liner.

18C.3.5.3 Perched Groundwater

Provisions for the permanent artificial lowering of perched groundwater layers on a site may be considered. Perched groundwater layers shall be considered as those distinct layers of groundwater of limited area caused by the blockage of normal seepage of rainwater/snowmelt/runoff by an impervious soil layer. Detailed Justification shall be provided to confirm that the groundwater layers are of limited area and to confirm the adequacy of the proposed drainage around the pond system.

Minimum requirements shall include the permanent lowering of the perched groundwater table to an elevation one foot below the top of the pond seal. If the perched groundwater table after permanent lowering is less than two feet below the bottom of the lagoon, the lagoon shall be provided with a synthetic liner.

18C.3.6 Geology

18C.3.6.1 Karst Features

The pond shall not be located on sites that exhibit Karst features; i.e., sink holes or solution channeling generally occurring in areas underlain by limestone or dolomite.

All proposed lagoon facilities in Karst areas will require special review early in the siting procedure. Proposed locations shall be submitted for review and if it is determined that a potential for sinkhole development exists, a lagoon system will not be permitted.

If the facility is located in an area of known or suspected fractured limestone (Karst topography) all cells must be lined with a synthetic liner.

18C.3.6.2 Bedrock Separation

A separation of ten feet between the pond bottom and any bedrock formations is recommended with a minimum separation of four feet required. A synthetic liner shall be required if the lagoon bottom is to be located less than ten feet above a carbonate or sandstone formation.

18C.3.7 Flooding Protection

The top of the pond embankments shall be constructed at least one foot above the elevation of the 100-year flood. Other flood protection requirements shall be in accordance with Section 14.2.4 of these standards.

18C.4 DESIGN LOADINGS

18C.4.1 Hydraulic

18C.4.1.1 Controlled Discharge Ponds

The hydraulic design of controlled discharge ponds shall be based upon the average flow for the wettest 180 consecutive days of record (AWW-180 flow).

The design flow may be adjusted to account for infiltation and inflow which is eliminated by sewer system rehabilitation.

18C.4.1.2 Aerated Ponds

a. For municipal wastes, the hydraulic flows used to determine cell sizes in accordance with Section 18C.6.1 shall be based upon the ADW flow plus 30% of the 30-day average wet weather (AWW-30) flow in excess of the ADW flow, or 100 gpcd, whichever is greater. The design flow may be adjusted to account for infiltation and inflow which is eliminated by sewer system rehabilitation.

b. For industrial and commercial wastes, the hydraulic flows used to determine cell sizes in accordance with Section 18C.6.1 shall be based upon the average daily flow for the maximum 15-day period. This value may be reduced up to 10% if the average daily flow for the maximum 30-day period is less than 70% of the 15-day value.

18C.4.1.3 Other Waste Sources

The hydraulic flows used to determine cell sizes in accordance with Sections 18C.5.3 and 18C.6.1 for low volume waste sources such as parks, camps, schools, campgrounds or similar facilities can be based on published values for liquid waste generation from that type of facility.

The design flows for new municipal systems shall be in accordance with Section 14.4.5.3.

18C.4.2 Organic

The organic design of ponds shall be in accordance with Section 14.4.6.

18C.4.3 Industrial Wastes

The requirements for industrial wastes shall be in accordance with Sections 14.4.5.4, 14.4.6.2 and 18A.4.

18C.5 CONTROLLED DISCHARGE POND DESIGN

18C.5.1 Number of Cells

18C.5.1.1 Two Cells

A minimum of two cells are required for those small installations in which less than one acre total surface area is required. Two cell systems shall consist of one primary and one secondary cell. The primary cell should contain approximately two-thirds of the total water surface area.

18C.5.1.2 Three Cells

A minimum of three cells are required for all facilities greater than one acre total surface area. Systems consisting of three or more cells shall have a minimum of two secondary cells and one or more primary cells.

18C.5.2 Organic Loading

18C.5.2.1 Two Cells

The maximum organic loading on the primary cell of a two cell controlled discharge pond (based upon the water surface area of the primary cell at the maximum pond water depth) shall not exceed 20 pounds BOD_5/acre/day.

18C.5.2.2 Three or More Cells

The maximum organic loading on the primary cell(s) of a three or more cell controlled discharge pond system shall be based upon the total water surface area of the primary cell(s) at the maximum pond water depth and shall not exceed 25 pounds BOD_5/acre/day.

18C.5.3 Hydraulic Storage

18C.5.3.1 Entire System

Controlled discharge pond systems shall provide a minimum hydraulic storage time of 180 days based upon the wettest 180 consecutive days of record.

Storage shall be computed as the total volume provided in the entire system between the two foot depth level and the maximum water surface level. The volume below the two foot level shall not be considered when computing storage time.

$$\text{Storage} = \frac{\text{volume above 2' level (gallons)}}{\text{*Q (gallons/day)}} \geq 180 \text{ days}$$

*Q = average daily design flow based upon the wettest 180 consecutive days of record. The design flow may be adjusted to account for infiltration and inflow which is eliminated by sewer system rehabilitation.

18C.5.3.2 Secondary Cells

The secondary cells of a controlled discharge pond having three or more cells shall provide a minimum storage of thirty (30) days each. The secondary cell of a two cell system shall provide a minimum storage of sixty (60) days.

18C.5.3.3 Greater Times

Hydraulic storage times of greater than 180 days may be required for instances where a longer storage period is required to maintain the quality of the receiving stream.

18C.5.4 Liquid Depths

18C.5.4.1 Primary Cells

The liquid depth of primary cell(s) shall not exceed a total of six feet.

18C.5.4.2 Secondary Cells

The liquid depth of secondary cell(s) shall not exceed a total of eight feet.

18C.5.5 Piping Arrangement

18C.5.5.1 Reliability

The pond cells and piping shall be designed such that reliability and flexibility of operation are provided.

18C.5.5.2 Cell Isolation

Reliability for controlled discharge pond systems shall imply that piping and control structures are provided to allow the system to remain in operation with any one cell out of service. Individual influent lines shall be provided in accordance with Section 18C.7.4 to allow for primary cell isolation; and multi-level cell drawdown lines shall be provided in accordance with Section 18C.7.6.4 to allow for secondary cell isolation and controlled discharge and selective drawdown of such cells. The piping for secondary cells of a three cell system shall be arranged so that transfer of wastewater from the primary cell to one of the secondary cells can occur simultaneously with discharge to the receiving stream from the other secondary cell.

18C.5.5.3 Influent

In a three cell system the piping shall be arranged such that raw influent can be diverted to only one of the secondary cells.

18C.5.5.4 Effluent

The piping shall be arranged such that effluent from any primary cell cannot be discharged directly to the receiving stream.

18C.5.6 Control Structures

A minimum of three control structures shall be provided to allow for system operation and operator accessibility:

18C.5.6.1 Influent Structure

The influent control structure shall be located prior to the system to allow for diversion of the raw influent into a minimum of two cells, thus allowing for primary cell isolation.

18C.5.6.2 Inter-Cell Structure

An inter-cell control structure shall allow multi-level drawoff from the primary cell(s) and flow diversion to any secondary cell.

18C.5.6.3 Effluent Structure

The effluent control structure shall provide for multi-level drawdown of any secondary cell and discharge to the receiving stream.

18C.6 AERATED FACULTATIVE POND DESIGN

18C.6.1 Sizing of Aerated Facultative Ponds

18C.6.1.1 Detention Time for Typical Waste

As a minimum, aerated facultative pond systems designed to treat a typical domestic waste ($BOD_5 \leq$ 200 mg/l) shall consist of two or more aerated cells and one quiescent cell or zone which provide the following minimum hydraulic detention times:

MINIMUM DETENTION TIMES FOR AERATED LAGOON CELLS FOR TYPICAL DOMESTIC WASTE (BOD $\leq$ 200 mg/l)

*No. of Aerated Cells	**Days for Treatment	Quiescent Cell, Days	Total Detention Time, Days
2	29	2	31
3	24	2	26
4	23	2	25

* The first two cells shall be of equal size and no one cell shall provide more than 50% of the total required volume.

** Includes five days detention time for ice cover and sludge accumulation. Ice cover represents 10% of the original treatment volume in the above table, but shall be calculated on the basis of an average ice thickness of 12". Sludge volume is based upon 1.54 days of detention time per 100 mg/l of suspended solids in the influent for a 20-year accumulation of sludge.

18C.6.1.2 Detention Time for Greater Strength Waste

The design minimum detention times of aerated cells treating domestic type waste of greater strength than 200 mg/l BOD_5 should be determined utilizing the following equation on a per-cell basis.

$$t = \frac{E}{2.3K_1 \times (100 - E)}$$

t = detention time, in each aerated cell, days

E = percent of BOD_5 to be removed in the aerated cell

K_1 = reaction coefficient, per day, base 10. For normal domestic sewage the K_1 value may be 0.12/day for T = 20°C and 0.06/day for T = 1°C.

See Appendix 18C-A for derivation of reaction formula.

Aerated facultative pond systems designed to treat greater strength waste with a BOD_5 of 400 mg/l or more shall consist of three or more aerated cells and one quiescent cell or zone. The first two cells shall be of equal size and no one cell shall provide more than 50% of the total required volume.

The following minimum detention times are presented for illustration and result from use of the above formula with provision of additional volume for sludge accumulation and ice cover.

MINIMUM DETENTION TIMES
FOR AERATED LAGOON CELLS
FOR GREATER STRENGTH WASTE

Influent BOD mg/l	No. of Aerated Cells	*Days for Treatment	Quiescent Cell, Days	Total Detention Time, Days
400	3	40	2	42
400	4	35	2	37
400	5	34	2	36
1000	3	70	2	72
1000	4	61	2	63
1000	5	56	2	58
1000	6	54	2	56

* Includes nine days detention for ice cover and sludge accumulation at 400 mg/l and 19-20 days detention for ice cover and sludge accumulation at 1000 mg/l. Suspended solids assumed at 400 and 1000 mg/l.

Ice cover represents 10% of the original treatment volume in the above table, but shall be calculated on the basis of an average ice thickness of 12".

The days for sludge accumulation should be adjusted for actual conditions if the suspended solids concentrations differ appreciably from the assumed values given.

Required volume for sludge accumulation for 20 years may be computed on the basis of 1.54 days of volume required per 100 mg/l of suspended solids in the influent flow.

18C.6.1.3 Temperatures

For the determination of the minimum detention time required in the aerated cells, 1°C shall be considered the maximum design temperature for domestic type wastes. 20°C shall be used in determining the oxygen requirements of the system unless the wastes will be at a higher temperature.

18C.6.1.4 Reaction Rate Conversion

Conversion of the reaction rate coefficient to temperatures other than 20°C shall be according to the following formula:

$K_1 = K_{20}\,\theta^{(T-20)}$
T = Reactor temperature in °C
θ = Temperature correction factor

18C.6.1.5 K-Factor Determination

The vaulues for K and θ shall be determined experimentally for aerated pond systems which will be subjected to industrial waste that will have a substantial impact upon the treatment system, septic waste, partially treated waste, or other nondomestic strength waste. Conversion of the reaction rate coefficient to the appropriate temperature value shall be based upon experimental data using one of the following methods.

a. BOD Bottle Simulation Experimental Technique

BOD bottle simulation may be used to simulate the BOD removal rate "K". When this technique is applied, at least four composite samples must be obtained on days representative of the design condition. To verify results, each of these four samples should be split and a BOD bottle simulation test conducted for each. Samples should be incubated at critical operating temperatures, and a series of tests run over a 10 to 20 day period. The "K" rate at critical low temperature sets the detention

time in the pond. The "K" rate at critical high temperature sets the maximum required oxygen supply rate. The data can be used to determine the "K" rate by use of the Thomas method or the least squares method.

b. Bench Scale K-Factor Determination

It is suggested that at least four reactors with detention times from 2 - 20 days be used. Reactors should be set up and flow rates established to achieve the desired detention time. Continuous aeration should be provided.

COD tests should be made daily. When effluent values have stabilized, the influent and effluent BOD's and COD's will indicate the K rate that applies. The source of feed to each reactor should be the same and should be at a continuous rate. The dissolved oxygen and mixing power level in the reactor should approximate that of the aerated pond.

The temperature correction factor may be established by lowering the reactor temperature or by using the BOD bottle simulation technique.

c. Other Experimental Techniques

The designer may choose to use another experimental technique for "K" and θ factor determination. It is recommended that a description of the experimental technique and program be submitted to the Department for approval prior to initiating the testing program.

18C.6.2 System Reliability and Piping

The pond cells and piping shall be designed such that reliability and flexibility of operation are provided. All systems shall be designed with piping flexibilities to permit isolation of any cell without affecting the transfer and discharge capabilities of the total system. In addition, the ability to discharge the influent waste load to a minimum of two cells and to all primary cells in the system shall be provided. Raw influent shall not be diverted to the quiescent cell <u>or zone.</u> When disinfection is required, cell isolation shall not result in bypassing of the disinfection facilities.

18C.6.3 Cell Depths

The depth of cells should be in the range of 10-15 feet and shall be at least five feet.

18C.6.4 Aeration Equipment

18C.6.4.1 General

Adequate mixing to provide oxygen dispersion shall be provided.

Oxygen requirements will generally depend upon the BOD loading, degree of treatment required, temperature, and if applicable, the concentration of suspended solids to be maintained. Aeration equipment shall be capable of supplying a minimum of 2 lbs. O_2/lb. of BOD_5 applied, and maintaining an average dissolved oxygen level of 2 mg/l or greater in the cells at all times.

Suitable protection from the elements shall be provided for electrical controls, aerators and piping.

a. Manufacturer's data shall be submitted to verify mixing zone and oxygen dispersion capabilities of the aerators to be used.

b. Reliability in diffused air systems, to include bottom diffusers and jet aeration, shall be provided in accordance with the following:

   The blowers shall be provided in multiple units, so arranged and in such capacities as to meet the maximum air demand with the single largest unit out of service.

   The air diffusion system for each aeration cell shall be designed such that the largest section of diffusers can be isolated without losing more than 50 percent of the oxygen transfer capability within each cell.

c. Reliability in mechanical aeration systems, to include surface aerators (floating and fixed) shall be provided in accordance with the following:

   There shall be a sufficient number of aerators to enable the design oxygen transfer of a particular cell to be maintained with the largest capacity aerator in that cell out of service. It is permissible for the backup aerator to be a complete uninstalled unit or a motor and prop assembly (drive train) provided that the

installed aerator or parts can be easily removed and replaced. However, at least two aerators shall be installed in each primary cell.

d. Exceptions of Duplication Requirements

The preceding shall be considered minimum, and more stringent duplication may be required if the situation so warrants. The only exception to this may be in the upgrading of an existing plant which contains one unit large enough to provide at least 100 percent of the total design loading capacity to that unit operation. In this situation, a case-by-case determination of requirements for duplication will be made by this Department.

18C.6.4.2 Diffused Aeration

a. The specified capacity of blowers or air compressors should take into account the possibility that the air intake temperature may reach 104°F (40°C) or higher and also that the barometric pressure may be less than normal.

The specified capacity of the motor drive should also take into account that the intake air temperature may be as low as -22°F (-30°C) or lower, which may require oversizing of the motor or a means of reducing the rate of air delivery so as to prevent overheating and damage to the motor.

b. The blowers shall be provided in multiple units, so arranged and in such capacity as to meet the maximum air demand with the single largest unit out of service. The design should consider varying the volume of air delivered in proportion to the demand resulting from differing loads on the ponds. Blower design shall consider the potential for future loads which may require a greater oxygen supply.

c. The spacing of the diffusers should be in accordance with the oxygenation requirements throughout the length of each pond. The problem of ice cover affecting air distribution during winter operation should be considered in the design of the air diffuser system and selection of the blowers.

d. Individual control valves shall be provided at each junction in the aeration matrix, preferably with indicator markings for throttling or

for complete shut off. Diffusers and piping in any single assembly shall be designed to have substantially uniform pressure loss.

e. Air filters shall be provided in numbers, arrangements, and capacities to furnish at all times an air supply sufficiently free from dust to prevent clogging of the diffuser system. The location of air filters shall be easily accessible for maintenance purposes.

f. Blower unit locations shall be carefully chosen to reduce noise levels in adjacent working areas.

18C.6.4.3 Tube Diffuser Systems

a. The diffuser lines (tubes) shall extend across the pond with sufficient slack allowed for raising and cleaning. The air headers shall be protected from freezing.

b. To prevent clogging of the air lines, provisions shall be made to accommodate frequent cleaning. Hydrogen chloride gas ports and adequate hydrogen chloride gas cleaning equipment shall be provided for this purpose.

18C.6.4.4 Other Diffused Air Systems

a. The air supply lines shall be properly anchored with corrosion resistant anchors capable of withstanding two times the bouyant force of the lines and be protected against temperature expansion and contraction.

b. Diffusers or equipment subject to clogging should be designed to be easily removed or cleaned without completely draining the pond.

c. The top of the diffusers (flat plate, vertical tube or other) shall terminate below the elevation of maximum anticipated ice thickness to avoid winter freezing problems. The air headers shall be protected from freezing.

18C.6.4.5 Platform Mounted Surface Aerators

a. Mechanisms shall be protected from freezing. Consideration should be given to the installation of splash plates for controlling misting.

b. Platform legs shall be spaced at a sufficient distance from the aerator to minimize the effect of ice build-up caused by splashing.

c. The designer should consider varying the amount of oxygen transfered in proportion to the demand represented by the load on the pond. (For example, time clock aerator operation or water level flexibility.)

d. Sufficient standby power shall be provided to prevent the aerators from freezing solid in an ice cover, or special provisions shall be made for aerator start-up under icing conditions.

e. Aerator accessibility shall be provided for periodic and major maintenance repairs. Access bridges shall be designed so as to provide structural support for necessary maintenance and removal equipment. Safety railings shall be corrosion resistant. Adequate provisions shall be made for easy aerator/motor removals.

f. A positive means of controlling the minimum liquid depth or other means shall be provided to prevent scouring of the pond bottom and destruction of the bottom seal.

18C.6.4.6 Floating Surface Aerators

a. Floating surface aerators shall be of the submerged motor type or the subsurface horizontally mixing aspirator type. As a minimum, one surface aerator shall be installed for each acre of aerated lagoon surface area and at least two aerators in each primary cell.

b. Floating surface aerators shall be anchored in at least three directions or attached to secure structural framing or bridging.

c. The floating aerator shall be designed to prevent icing conditions or tipping problems caused by an ice buildup on one side or on top of the unit.

d. A positive means of controlling the minimum liquid depth or other means shall be provided to prevent scouring of the pond bottom and destruction of the bottom seal.

e. Adequate means shall be provided to prevent failure of operation of aspirator type aerators due to freezing or icing conditions.

f. Provisions shall be made for removal of floating aerators.

18C.6.5 Modifications to Existing Lagoons

Frequently the conversion of the conventional lagoon system to an aerated lagoon system can be the most economical and practical means of upgrading a facility to meet applicable effluent limits. In those cases the requirements that apply to new construction may be modified or waived, subject to the following limitation.

If the basis of design for the conversion to an aerated system includes an additional load greater than 25% of the present hydraulic load or 10% of the present organic load to accommodate population or industrial growth the design must meet the criteria for new construction.

18C.7 POND CONSTRUCTION DETAILS

18C.7.1 Pond Shape

18C.7.1.1 General

The shape of all cells should be such that there are no narrow or elongated portions. No islands, peninsulas or coves shall be permitted. Dikes should be rounded at corners to minimize accumulations of floating materials. Common dike construction, wherever possible, is strongly encouraged. Individual cells must be separated by earthen dikes except that the quiescent cell or zone may be formed by baffling off an area in the final aerated cell. Additional baffling in any cell can be provided to prevent short circuiting.

18C.7.1.2 Controlled Discharge Ponds

Round, square or rectangular cells with a length not exceeding three times the width are considered most desirable.

18C.7.1.3 Aerated Facultative Ponds

Aerated lagoons shall have a minimum length to width ratio of 2:1 and a maximum length to width ratio of 5:1 for each of the first two cells. A similar ratio is recommended for any additional aerated cells but is not mandatory. The inlet-outlet structures should be located in a manner that assures thorough mixing of all wastes.

18C.7.2 Embankments and Dikes

18C.7.2.1 Material

Dikes shall be constructed of relatively impervious material and compacted to at least 90 percent Standard Proctor Density to form a stable structure. Vegetation and other unsuitable materials

should be removed from the area upon which the embankment is to be placed.

18C.7.2.2 Top Width

The minimum dike top width shall be eight feet to permit access of maintenance vehicles except for systems where the total surface area does not exceed one acre, a minimum top width of six feet will be acceptable. A vehicle turnaround point or complete loop shall be included for vehicle access.

18C.7.2.3 Maximum Slopes

Inner and outer dike slopes shall not be steeper than 3 horizontal to 1 vertical (3:1).

18C.7.2.4 Minimum Slopes

Inner slopes should not be flatter than 4 horizontal to 1 vertical (4:1). Flatter slopes can be specified for larger installations because of wave action but have the disadvantage of added shallow areas being conducive to emergent vegetation. Outer dikes shall be designed and constructed to preclude surface runoff from entering the ponds by providing a minimum channel depth of one foot on the outer slope of the dike.

18C.7.2.5 Freeboard

Minimum freeboard shall be two feet. Additional freeboard may be required for large and/or elongated cells where severe wave action could occur.

18C.7.2.6 Design Depth

The minimum operating depth should be sufficient to prevent damage to the dikes, bottom, control structures, aeration equipment and other appurtenances. In no case should pond operating depths be less than two feet.

18C.7.2.7 Erosion Control

Erosion protection for all ponds, regardless of size, shall be provided. Such protection may be provided via the use of concrete or asphaltic aprons, stone riprap or artificial membranes. The minimum thickness of stone riprap protection shall be 6". Placement of riprap or other erosion protection devices should be such that quiescent areas, conducive to mosquito breeding, are not formed.

The erosion protection for all ponds cells shall be provided completely around the inner embankments and shall be placed from two feet below the minimum operating depth to at least one foot above the maximum operating depth (measured on the vertical). Additional height of erosion protection devices may be required for large and/or elongated cells where severe wave action could occur, and should be determined as a function of reach and wind velocity.

18C.7.2.8 Additional Erosion Protection

Riprap or an equivalent method of erosion control is required around all piping entrances and exits. Additional erosion control may be required on the exterior dike slope(s) to protect the embankment(s) from erosion due to severe flooding of an adjacent water course.

18C.7.2.9 Seeding

The dikes shall have a minimum cover layer of four inches of fertile topsoil to promote establishment of an adequate vegetative cover wherever riprap is not utilized. Perennial-type, low-growing, spreading grasses that withstand erosion and can be mowed are recommended for seeding of dikes. Alfalfa and other long-rooted crops shall not be used for seeding since the roots of this type are apt to impair the water holding efficiency of the dikes.

18C.7.3 Pond Bottom

18C.7.3.1 Soil

Soil used in constructing the pond bottom (not including seal) and dike cores shall be relatively incompressible and tight and compacted at or up to four percent above the optimum water content to at least 90 percent Standard Proctor Density.

18C.7.3.2 Seal

Ponds shall be sealed such that seepage loss through the seal is as low as practically possible. The percolation rate shall not exceed 1/16 inch per day at a water depth of six feet.

Soil seals must include bentonite or equivalent clay material in addition to optimum compaction. Where bentonite is used, the minimum seal thickness shall be four inches. In lieu of bentonite, alternate sealing materials such as membranes, soil cement or asphalt may be used.

Synthetic liners shall have a minimum thickess of 30 mills and shall be installed under the supervision of a qualified manufacturer's representative. The synthetic liner shall be anchored at the dike berm and shall be vented if gas generation from decaying organic material or air pumping from a fluctuating groundwater table is a potential problem.

There may be special conditions when reinforced membranes should be considered where extra tensile strength is required. The membrane liner material should be compatible with the contents of the ponds such that no damage results to the liner. The subgrade should be graded and compacted so that there are no holes or exposed angular rocks or pieces of wood or debris. If the subgrade is very gravelly and contains angular rocks that could possibly damage the liner, a minimum bedding of 3 inches of sand should be provided directly beneath the liner.

Following construction of the pond, the results of a testing program which indicates the adequacy of the seal shall be provided to this Department in writing prior to start up of operation. Where water is available, the seal testing should be accomplished by prefilling the pond to a minimum depth of six feet. Beginning not less than seven days after filling is completed, testing shall be performed to determine the water loss through the bottom and the embankments of the pond. The calculations for the water loss value must consider the influences of precipitation and evaporation during the test.

An acceptable alternate method for testing the pond seal would be to have such testing performed by a soils testing laboratory. Tests shall be performed on undisturbed soil samples which are collected in accordance with the procedure set forth by ASTM D-1587 and analyzed to determine the coefficient of permeability. The soil samples shall have a minimum depth of six inches. The testing shall be done at a head equivalent to a six foot pond operating depth.

At least one soil sample per acre shall be tested with a minimum requirement of two samples per cell. Selective testing shall be made to sample both the pond bottom and inner embankment slopes below the maximum operating depth. Using the coefficient of permeability, the rate of loss of wastewater through the seal shall be determined.

If unsatisfactory test results are obtained by either of the above test procedures, the pond shall be drained, if necessary, and reworked with additional testing performed until an adequate seal is obtained.

18C.7.3.3 Over-Excavation

For earthen ponds, a minimum over-excavation of two feet shall be required in cases where the bottom materials contain sand seams, gravel, or are generally unfit for pond bottom construction. The two foot excavation shall be replaced by suitable homogeneous bottom material prior to compaction and sealing.

18C.7.3.4 Uniformity

The pond bottom shall be as level as possible at all points. Finished elevations shall not be more than ± 3 inches from the average elevation of the bottom.

18C.7.4 Influent Lines

18C.7.4.1 Material

Pond influent lines should be of cast iron, ductile iron, or asbestos bonded, bituminous coated corrugated metal. For other materials selected, consideration must be given to the quality of the wastes, exceptionally heavy external loadings, abrasion, soft foundations and similar problems.

18C.7.4.2 Influent Structure

An influent structure shall be installed prior to entrance of the influent line into the pond and shall be located within or as close to the pond dike as topography permits. The influent sewer invert shall be at least six inches above the maximum operating level of the pond and provide sufficient hydrualic head without surcharging the manhole. The six inch requirement may be reduced on gravity systems if sufficient head is not available, but the influent sewer invert elevation

shall be no less than the maximum operating level of the pond and shall provide sufficient hydraulic head without surcharging the interceptor sewer.

18C.7.4.3 Flow Distribution

Flow distribution structures for ponds having multiple primary cells shall be designed to effectively split hydraulic and organic loads equally to the primary cells.

18C.7.4.4 Location

Influent lines for controlled discharge ponds shall be located along the bottom of the pond so that the top of the pipe is just below the average elevation of the pond seal; however, an adequate soil seal shall be provided around the pipe. The construction method used in the installation of the influent line shall assure that the pipe is not damaged during the installation.

18C.7.4.5 Point of Discharge

All primary cells for controlled discharge ponds shall have individual influent line(s) which terminate at approximately the center of the cell for proper solids dispersion. Consideration should be given to multi-influent discharge points for large primary cells to enhance distribution of wasteload on the cell.

All primary cells for aerated ponds shall have influent lines which distribute the load within the mixing zone of the aeration equipment to assure complete mixing of the incoming waste. For surface aerators the inlet should be beneath or in immediate proximity to one aerator. Consideration of multi-inlets should be closely evaluated for any diffused aeration systems. Discharge into each cell should be at the opposite end from the drawoff out of the cell to enhance plug flow and minimize short circuiting.

18C.7.4.6 Influent Discharge Apron

The influent line(s) shall discharge horizontally into a shallow saucer-shaped depression which has a radius of at least 50 feet for the primary cell(s) of a controlled discharge pond. Smaller depressions for ponds having a total area less than one acre and for secondary cells will be approved on a case-by-case basis. The depression

shall have a minimum depth of one foot and a maximum depth of one foot plus the influent pipe diameter. Proper sealing of the depression shall be provided.

The end of the discharge line(s) shall rest on a suitable concrete apron located at the center of the inlet depression which is large enough such that the terminal influent velocity at the end of the apron does not cause soil erosion. A minimum size apron of two feet square shall be provided.

18C.7.5 Control Structure

Facilities design shall consider the use of multi-purpose control structures, where possible, to facilitate normal operational functions such as drawdown and flow distribution, flow and depth measurement, sampling, pumps for recirculation, chemical addition and mixing and to minimize the number of construction sites within the dikes.

As a minimum, control structures shall be: (a) accessible for maintenance and adjustment of controls; (b) located such that dike maintenance and dike travel are not hindered (centered and flush with top dike grade or to side of and adjacent to top of dike); (c) adequately ventilated for safety and to minimize corrosion; (d) locked to discourage vandalism; (e) contain controls to allow variable water level and flow rate control, complete shut-off and draining to the two foot level; (f) constructed of non-corrosive materials (metal on metal contact in controls should be of like alloys to discourage electrometallic reactions); (g) located to minimize short circuiting within the cell; and, (h) protected against freezing and ice damage. Consideration should also be given to providing flexibility for regulation of pond elevation for operational purposes.

Individual unit isolation, dewatering and transfer capabilities shall be designed to provide flexibility in operation and maintenance. Either elevation differential or pumping capabilities may be used to provide this flexibility.

18C.7.6 Pond Piping

18C.7.6.1 Material

All pond withdrawal and transfer piping shall be of cast iron, ductile iron, PVC, or asbestos bonded, bituminous coated corrugated metal pipe. Pipes should be anchored with adequate erosion control.

18C.7.6.2 Hydraulic Capacity

a. The hydraulic capacity for intermittent discharge structures and piping for controlled discharge systems shall permit transfer of water at a minimum rate of six inches of pond water depth per day at the maximum design head.

b. The hydraulic capacity for continuous discharge structures and piping for aerated pond systems shall allow for a minimum of 250 percent of the design flow of the system or MWW flow, whichever is greater.

18C.7.6.3 Interconnecting Piping

Interconnecting piping for series operation of aerated pond cells and interconnection between divided primary cells and between secondary cells of controlled discharge ponds shall be valved or provided with other arrangements to regulate flow between the cells. Interconnecting pipes should discharge horizontally onto splash blocks and be terminated as near the dividing dike as construction permits. The piping shall be located at the two foot minimum depth (from the bottom of the cell) for controlled discharge ponds and between the two foot and three foot depth (from the bottom of the cell) for aerated ponds.

18C.7.6.4 Controlled Discharge Drawdown Structure Piping

a. Multi-Level Drawoffs

A minimum of two drawoff levels must be provided from each primary cell to the secondary cells, and a minimum of three drawoff levels from each secondary cell to the receiving stream. The bottom drawoff pipe shall be at the two foot depth, and the remaining pipes shall be evenly spaced to permit adequate drawoff of optimum quality cell effluent.

b. Scum Control

Provisions shall be included to insure that scum and floating materials shall not be drawn off with the cell effluent. Minimum requirements shall be either 90° elbows on each drawdown pipe, or the adequate sloping of each drawdown pipe.

18C.7.6.5 Aerated Facultative Pond Discharge Structure Piping

a. Multi-Level Drawoffs (Quiescent Cell)

For ponds that are designed deep enough to permit stratification of pond content, multiple drawoffs are required, and there shall be a minimum of two withdrawal pipes at different elevations. For use under constant discharge and warm weather conditions, a near surface overflow type withdrawal is recommended in order to withdraw the best effluent. Submerged withdrawal is recommended under cold weather conditions to avoid freezing problems.

b. Scum Control

The design shall include provisions to insure that scum and floating materials shall not be drawn off with the cell effluent.

18C.7.7 Prefilling

Where water is available, the pond shall be prefilled to the two foot level (or to the level at which the aeration equipment can effectively operate) to protect the liner, to prevent weed growth, to encourage rapid startup of the biological process and discourage odor, to reduce freeze up problems for late fall startups, to confirm the seal's integrity (as discussed in Section 18C.7.3.2) and to maintain the water content of the soil at or above optimum. However, the dikes must be completely prepared and sealed as described in Sections 18C.7.2 and 18C.7.3 before the introduction of water. Water for prefilling may be taken from the municipal water supply system or a nearby lake or stream. The use of water from a non-permitted source must be registered with this Department prior to initiation as required by 900--51.8(5) of the Iowa Administrative Code. The raw sewage influent alone should not be used for prefilling purposes.

18C.7.8 Cell Dewatering

The piping/pumping configuration shall be designed such that no discharge to the receiving stream will occur below the level of two feet for the secondary cells or directly from any level in the primary cell(s). Access to control and valving structures for cell drain lines shall be provided for maintenance and to insure the complete closure of such lines when not in operation.

18C.8 FLOW MEASUREMENT

Provisions for flow measurement for controlled discharge and aerated facultative pond systems shall be included as follows:

18C.8.1 Influent

The design shall include equipment and structures required to measure and record flow rates, and obtain 24-hour composite samples. Weirs shall not be used for influent flow measurement except for very low flows where self-flushing flow measuring devices are not accurate. Elapsed time meters (ETMs) with an event recorder on lift station pump controls will generally be an acceptable method of providing continuous influent flow monitoring for wastewater treatment pond systems (except when screw pumps or variable speed pumps are used).

18C.8.2 Effluent

Effluent flow measurement facilities shall be provided for all wastewater treatment ponds; however, continuous recording capabilities are not required. The capacity of such facilities for controlled discharge ponds must be adequate to measure maximum discharge rates. A V-notch weir without level monitoring equipment is permitted for measuring intermittent discharges from controlled discharge facilities.

18C.8.3 Small Facilities

Continuous flow measurement and recording requirements may be waived for any small wastewater treatment pond systems less than 100 P.E. Flow measurement devices should still be provided, however, and the design of the structure shall facilitate the installation of continuous flow recording equipment and automatic samplers.

18C.8.4 Equipment Protection

Effective weather and vandalism protection shall be provided for the flow measurement and recording equipment.

18C.8.5 Structures

Flow measurement structures shall have a diameter of at least five feet. The sidewalls shall be extended vertically to the top of the structure. The access opening shall be sufficiently large to provide easy access and adequate lighting and ventilating of the structure whenever entrance is necessary.

18C.9 DISINFECTION

18C.9.1 Application

Disinfection facilities for aerated facultative pond systems will only be required to comply with the fecal coliform criteria for Class A waters or waters entering a sinkhole. Specific effluent limitations for all aerated facultative pond systems impacting these waters will be determined by the Department. These specific effluent limitations will then guide the need for or type of disinfection equipment.

Disinfection facilities may be required for aerated facultative pond systems where the discharge is to a stream which flows through a residential area. Such determination will be made on a case-by-case basis. The need for positive disinfection of non-domestic wastes will also be determined on a case-by-case basis.

18C.9.2 Location

For aerated facultative ponds, disinfection facilities, to include flash mixing of the disinfectant at the point of application, should be located prior to the quiescent cell. An optional point of application would be after the quiescent cell which would include flash mixing and chlorine contact facilities (if chlorine is used as the disinfectant).

18C.10 MISCELLANEOUS

18C.10.1 Fencing

The pond area shall be enclosed with an adequate fence to prevent entering of livestock and discourage trespassing. Fencing should not obstruct vehicle traffic on top of the dike. A vehicle access gate of sufficient width to accomodate mowing equipment shall be provided. All access gates shall be provided with locks.

18C.10.2 Access

An all-weather access road shall be provided to the pond site to allow year-round maintenance of the facility.

18C.10.3 Warning Signs

Appropriate permanent signs shall be provided along the fence around the pond to designate the nature of the facility and advise against trespassing. At least one sign shall be provided on each side of the site and one for every 500 feet of its perimeter.

18C.10.4 Groundwater Monitoring

An approved system of groundwater monitoring wells or lysimeters may be required around the perimeter of the pond site to facilitate groundwater monitoring. The need for wells and/or lysimeters will be determined on a case-by-case basis by this Department.

18C.10.5 Laboratory Equipment

For laboratory equipment refer to Chapter 14 of the Design Standards.

18C.10.6 Pond Level Gauges

Pond level gauges shall be provided for all cells of controlled discharge ponds. Such devices shall be permanently installed to allow easy observation of pond operational depths. The use of a calibrated mast, pipe, or inclined concrete section of the dike may be used. If a calibrated mast or pipe is utilized, the mast or pipe shall be adequately anchored. Wooden staff gauges will not be approved. The outlet control structures may also be utilized for depth measurement if properly and permanently calibrated.

18C.10.7 Service Building

Consideration in design should be given to a service building for laboratory and maintenance equipment.

APPENDIX 18C-A

Derivation of Reaction Formula

$$t = \frac{E}{2.3\ K_1 \times (100 - E)}$$

t = detention time, days
E = percent BOD_5 to be removed
K_1 = reaction coefficient

Above formula was developed from the following equations and assumptions:

1. $-\frac{dC}{dt} = K_e\ C$ (1st order kinetics)

2. $-\frac{dC}{dt} V = Q\ (Co - C)$ (complete mix reactor)

Co = concentration, influent (mg/l)
C = concentration, within reactor and effluent (mg/l)
Q = flow rate (MGD)
K_1 = reaction of coefficient ($time^{-1}$)
V = volume of reactor (MG)

Combining equations 1 & 2 with $E = \frac{Co - C}{Co} \times 100$;

(where E = efficiency)

Gives $t = \frac{E}{2.3\ K_1 \times (100 - E)}$

i.e.,

By combining equations 1 and 2, $K_e\ C = \frac{Q}{V}\ (Co - C)$

Also since $\frac{Q}{V} = \frac{1}{t}$ then $K_e\ C = \frac{Co - C}{t}$ or $t = \frac{Co - C}{K_c\ C}$

Combining, $t = \frac{Co - C}{K_e\ C}$, $\frac{Co - C}{Co}\ 100 = E$, and $K_e = 2.3\ K_1$ ($\ln = 2.3 \log_{10}$)

Produces $t = \frac{E}{2.3\ K_1 \times (100 - E)}$

APPENDIX 18C-B

WASTEWATER TREATMENT POND FLOW SCHEMATICS

FOR PIPING AND RELIABILITY

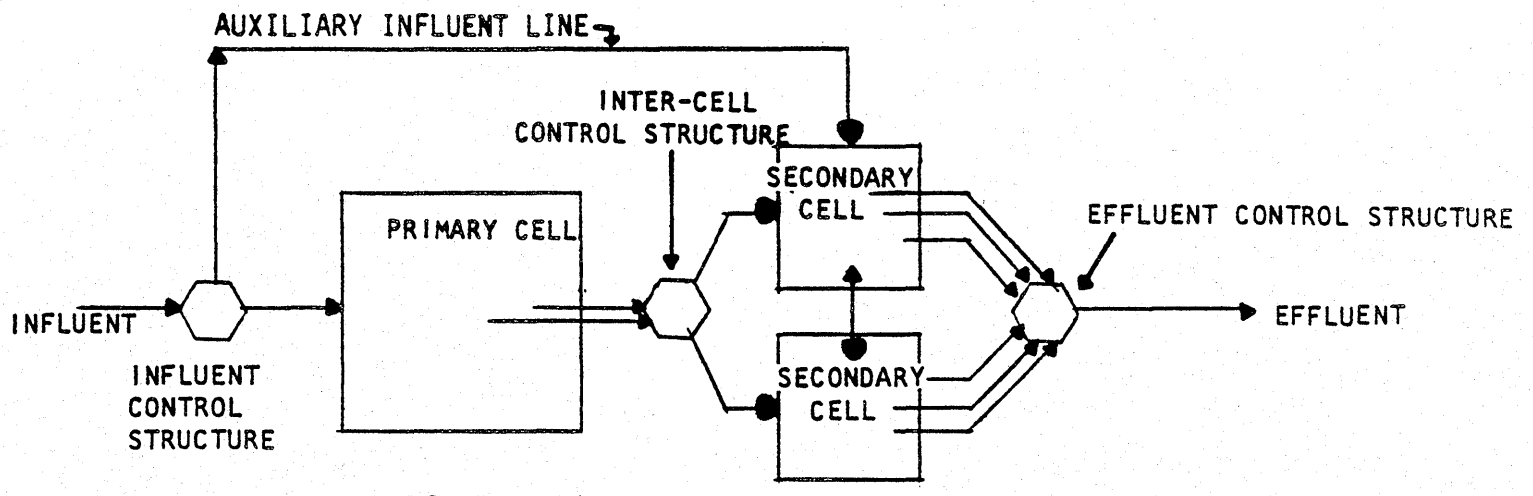

3-CELL CONTROLLED DISCHARGE POND SYSTEM

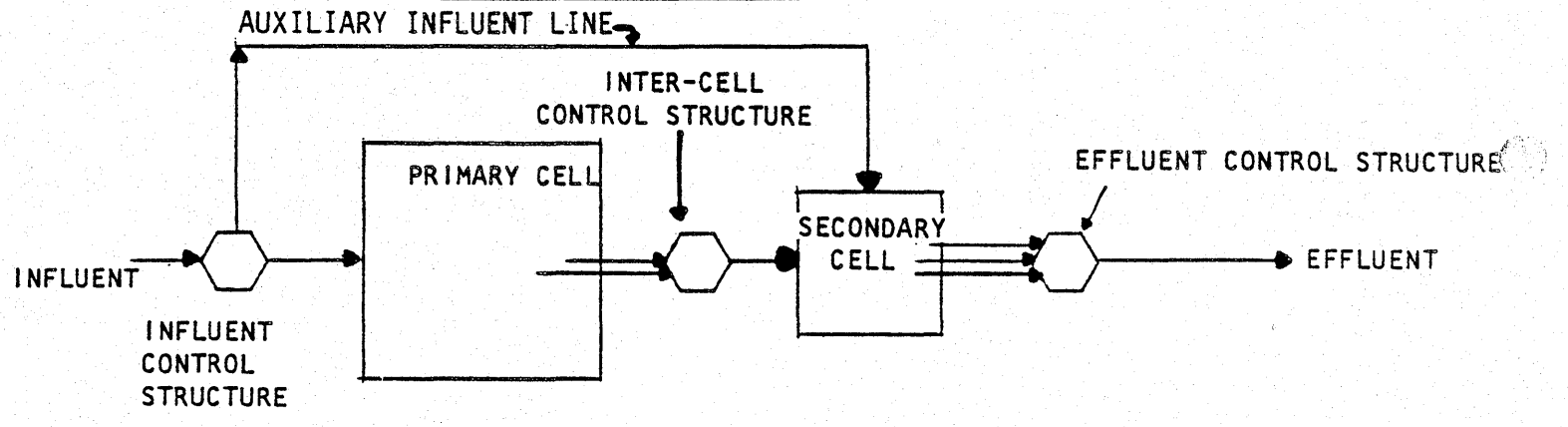

2-CELL CONTROLLED DISCHARGE POND SYSTEM

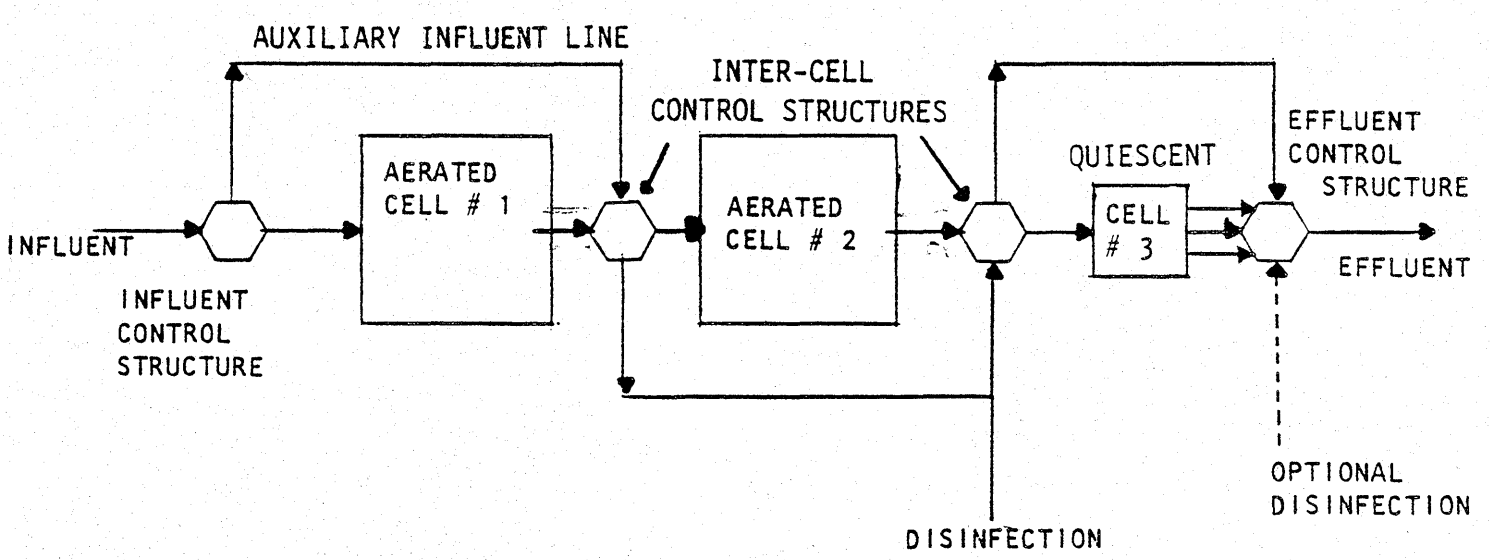

AERATED FACULATIVE POND SYSTEMS

APPENDIX 18C-C

TYPICAL 2 - CELL CONTROLLED DISCHARGE POND

180 DAYS TOTAL STORAGE ABOVE THE 2' DEPTH LEVEL PROVIDED
(STORAGE BASED UPON WETTEST CONSECUTIVE 180 DAY FLOW PERIOD)

MAXIMUM TOTAL SURFACE AREA FOR 2 CELL SYSTEMS OF 1 ACRE

PRIMARY CELL AREA APPROXIMATELY 2/3 OF TOTAL SURFACE AREA

SECONDARY CELL MINIMUM STORAGE OF 60 DAYS

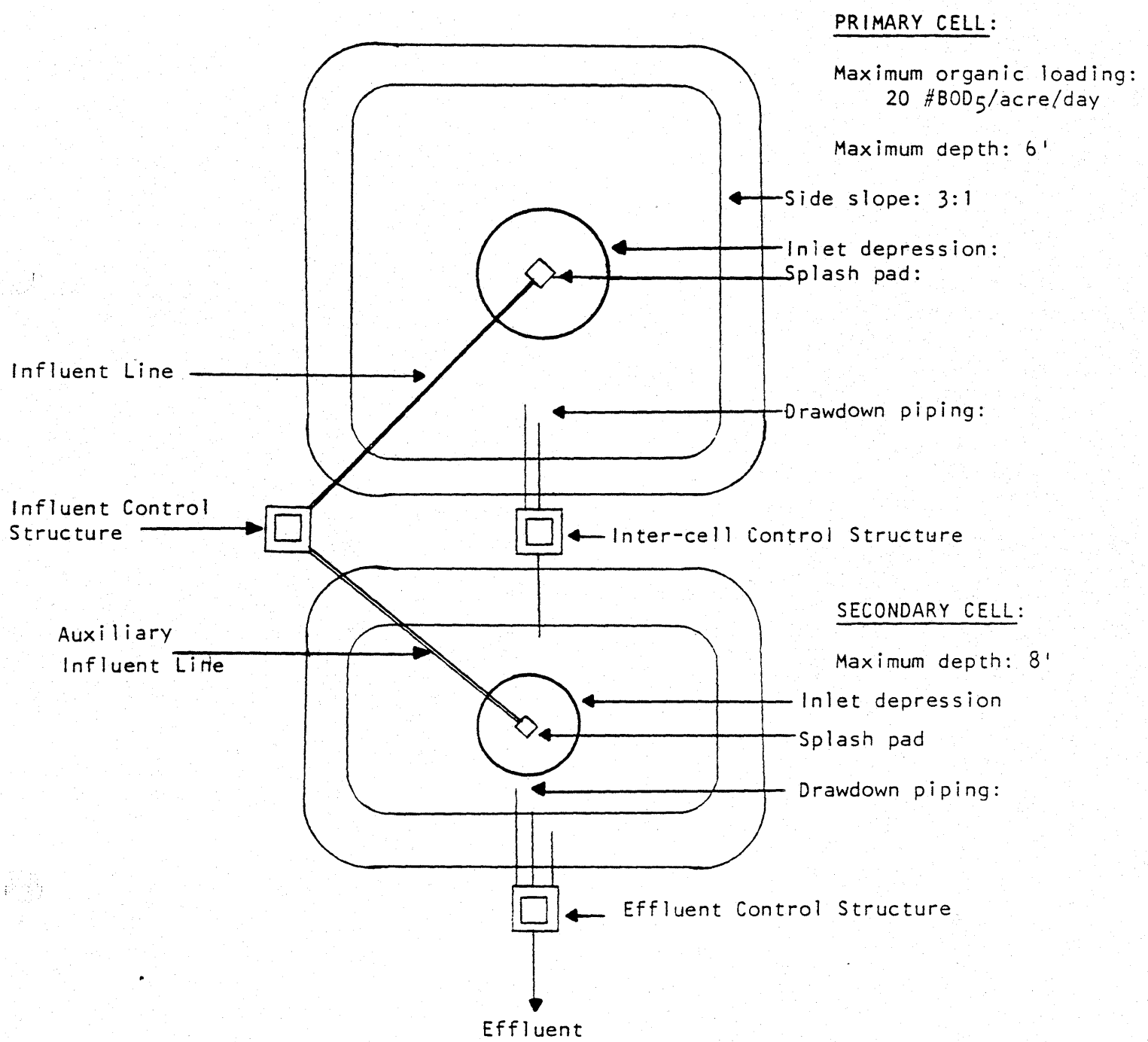

APPENDIX 18 C-D

TYPICAL 3 - CELL CONTROLLED DISCHARGE POND

180 DAYS TOTAL STORAGE ABOVE 2' DEPTH LEVEL PROVIDED
SECONDARY CELLS - 30 DAYS STORAGE EACH (MINIMUM)
(STORAGE BASED UPON WETTEST CONSECUTIVE 180 DAY FLOW PERIOD)

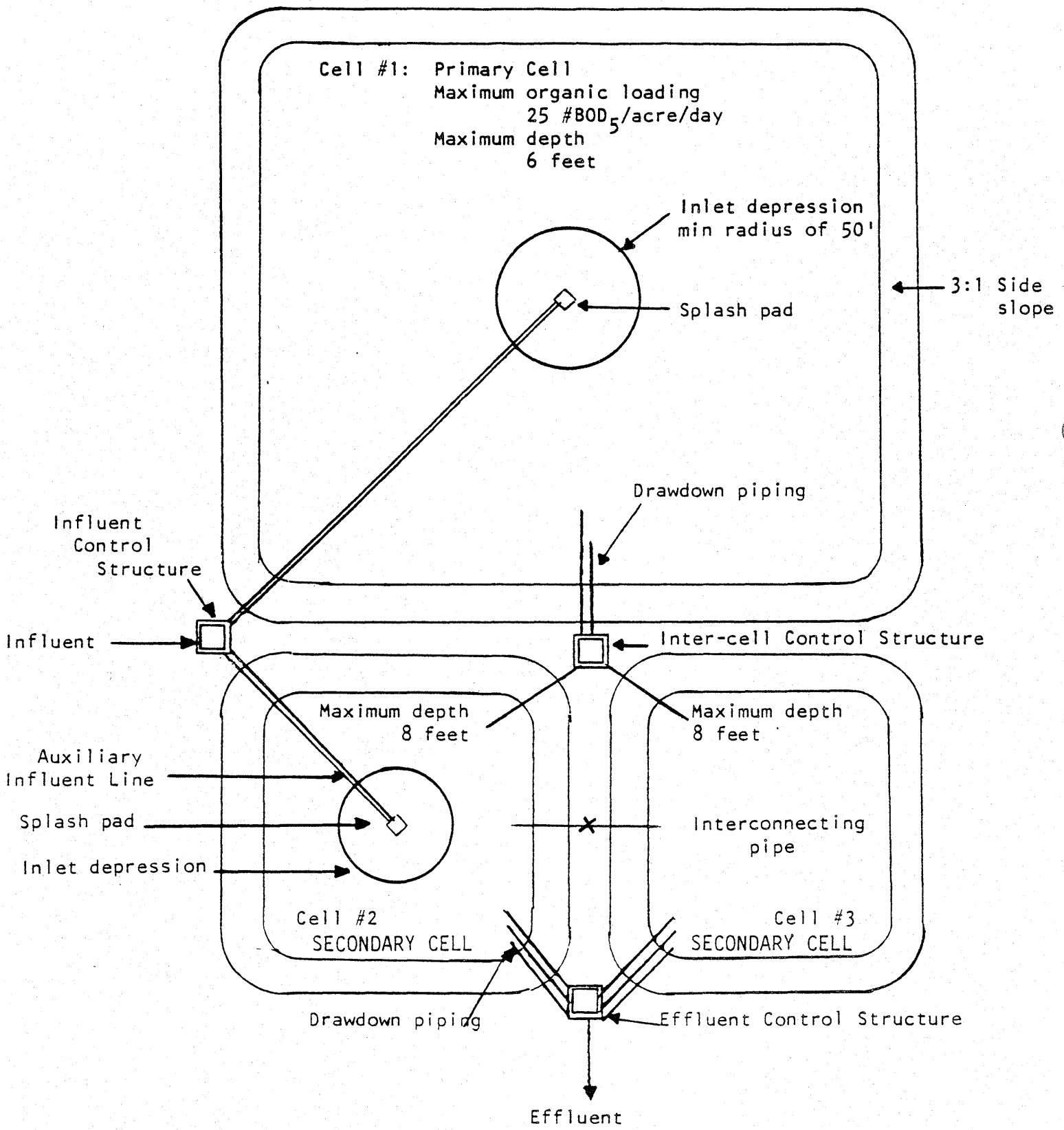

APPENDIX 18C-E

TYPICAL 4 - CELL CONTROLLED DISCHARGE POND

180 DAYS TOTAL STORAGE ABOVE 2' DEPTH LEVEL PROVIDED:
SECONDARY CELLS - 30 DAYS STORAGE EACH (MINIMUM)
(STORAGE BASED UPON WETTEST CONSECUTIVE 180 DAY FLOW PERIOD)

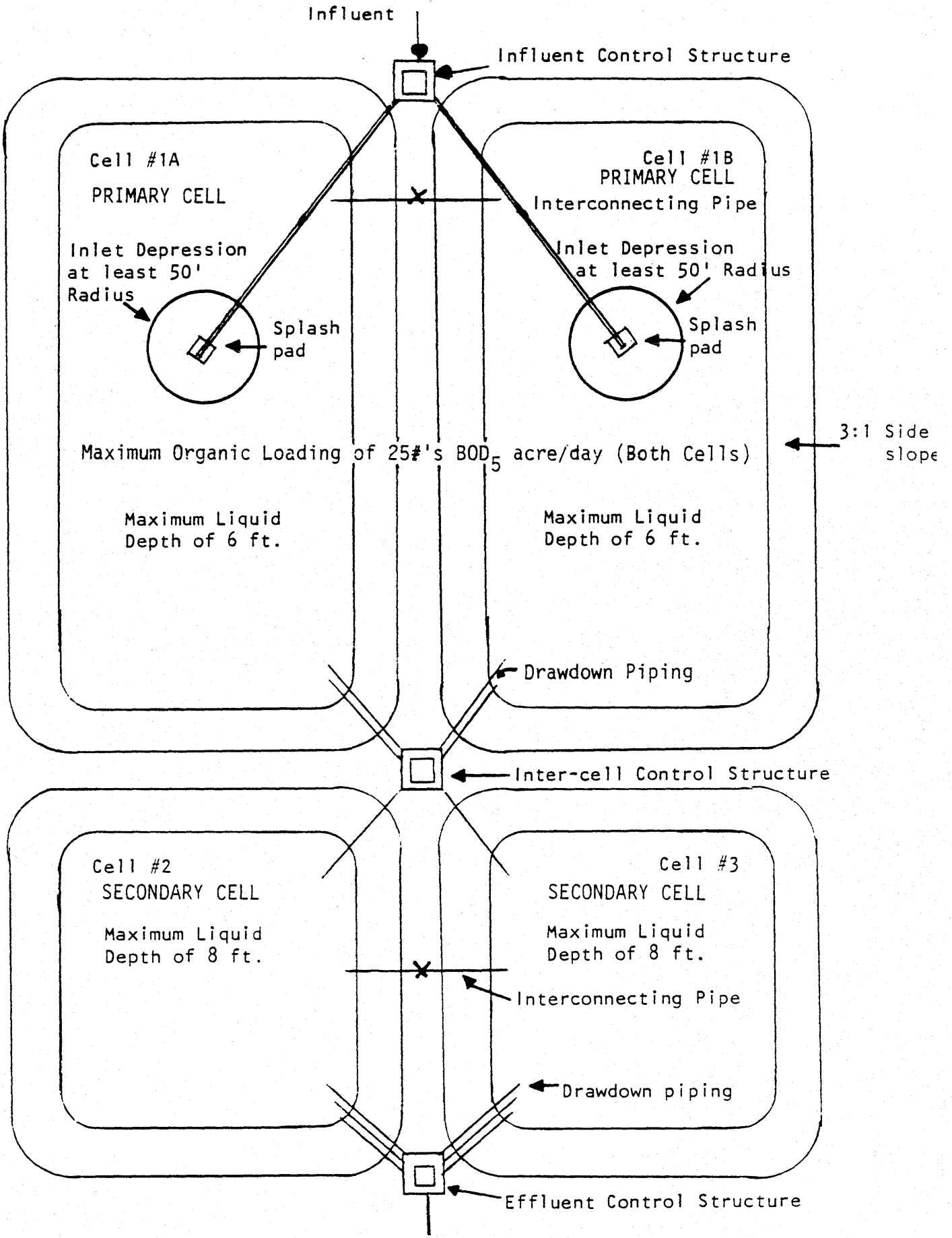

IOWA WASTEWATER FACILITIES DESIGN STANDARDS

CHAPTER 19

SUPPLEMENTAL TREATMENT PROCESSES

IOWA WASTEWATER FACILITIES DESIGN STANDARDS

CHAPTER 19

SUPPLEMENTAL TREATMENT PROCESSES

19.1 GENERAL

19.1.1 Applicability

This chapter is applicable to construction, installation or modification of any disposal system required to obtain a construction permit from this Department under the Iowa Code, Section 455B.45, and 900--64.2 of the Iowa Administrative Code (IAC).

19.1.2 Variances [900--64.2(9)"c", "d" and "e", IAC]

c. Variances from the design standards and siting criteria which provide, in the judgment of the department, for substantially equivalent or improved effectiveness may be requested when there are unique circumstances not found in most projects. The executive director may issue variances when circumstances are appropriate. The denial of a variance may be appealed to the commission.

d. When reviewing the variance request, the executive director may consider the unique circumstances of the project, direct or indirect environmental impacts, the durability and reliability of the alternative, and the purpose and intent of the rule or standard in question.

e. Circumstances that would warrant consideration of a variance (which provides for substantially equivalent or improved effectiveness) may include the following:

(1) The utilization of new equipment or new process technology that is not explicitly covered by the current design standards.

(2) The application of established and accepted technologies in an innovative manner not covered by current standards.

(3) It is reasonably clear that the conditions and circumstances which were considered in the adoption of the rule or standard are not applicable for the project in question and therefore the effective purpose of the rule will not be compromised if a variance is granted.

19.1.3 Explanation of terms

The terms "shall" or "must" are used in these standards when it is required that the standard be used. Other terms such as "should" and "recommended" indicate desirable procedures or methods which should be considered but will not be required.

19.2 PHOSPHORUS REMOVAL BY CHEMICAL TREATMENT

19.2.1 General

19.2.1.1 Method

Addition of lime or the salts of aluminum or iron may be used for the chemical removal of soluble phosphorus. The phosphorus reacts with the calcium, aluminum or iron ions to form insoluble compounds. These insoluble compounds may be flocculated with or without the addition of a coagulant aid such as a polyelectrolyte to facilitate separation by sedimentation.

19.2.1.2 Design Basis

19.2.1.2.1 Preliminary Testing

Laboratory, pilot or full scale trial of various chemical feed systems and treatment processes are recommended to determine the achievable performance level, cost-effective design criteria, and ranges of required chemical dosages.

19.2.1.2.2 System Flexibility

Systems shall be designed with sufficient flexibility to allow for several operational adjustments in chemical feed location, chemical feed rates, and for feeding alternate chemical compounds.

19.2.2 Process Requirements

19.2.2.1 Dosage

The required chemical dosage shall include the amount needed to drive the chemical reaction to the desired state of completion plus the amount required due to inefficiencies in mixing or dispersion. Excessive chemical dosage should be avoided.

19.2.2.2 Chemical Selection

The choice of lime or the salts of aluminum or iron should be based on the wastewater characteristics and the economics of the total system.

When lime is used it may be necessary to neutralize the high pH prior to subsequent treatment in secondary biological systems or prior to discharge in those flow schemes where lime treatment is the final step in the treatment process.

19.2.2.3 Chemical Feed Points

Selection of chemical feed points shall include consideration of the chemicals used in the process, necessary reaction times between chemical and polyelectrolyte additions, and the wastewater treatment processes and components utilized.

19.2.2.4 Flash Mixing

Each chemical must be mixed rapidly and uniformly with the flow stream. Separate mixing basins equipped with mechanical mixing devices should be provided with a detention period of at least 30 seconds.

19.2.2.5 Flocculation

The particle size of the precipitate formed by chemical treatment may be very small. Consideration should be given in the process design to the addition of synthetic polyelectrolytes to aid settling. The flocculation equipment should be adjustable in order to obtain optimum floc growth, control deposition of solids, and prevent floc destruction.

19.2.2.6 Liquid - Solids Separation

The velocity through pipes or conduits from flocculation basins to settling basins should not exceed 1.5 feet per second in order to minimize floc destruction. Entrance works to settling basins should also be designed to minimize floc shear.

Settling basin design shall be in accordance with criteria outlined in Chapter 16. For design of the sludge handling system, special consideraton should be given to the type and volume of sludge generated in the phosphorus removal process.

19.2.2.7 Filtration

Effluent filtration shall be considered where effluent total phosphorus concentrations of less than 1 mg/l must be achieved.

19.2.3 Feed Systems

19.2.3.1 Location

All liquid chemical mixing and feed installations shall be installed on corrosion resistant pedestals elevated above the floor level for ease of cleaning.

Lime feed equipment shall be located so as to minimize the length of slurry conduits. All slurry conduits shall be accessible for cleaning.

19.2.3.2 Liquid Chemical Feed System

Liquid chemical feed pumps shall be of the positive displacement type with variable feed rate. Pumps shall be selected to feed the full range of chemical quantities required for the phosphorus mass loading conditions anticipated with the largest unit out of service.

Screens and valves shall be provided on the chemical feed pump suction lines.

An air break or anti-siphon device shall be provided where the chemical solution stream discharges to the transport water stream to prevent an induction effect resulting in overfeed.

Consideration shall be given to providing pacing equipment to optimize chemical feed rates.

19.2.3.3 Dry Chemical Feed System

Each dry chemical feeder shall be equipped with a dissolver which is capable of providing a minimum 5-minute retention at the maximum feed rate.

Polyelectrolyte feed installations shall be equipped with two solution vessels and transfer piping for solution make-up and daily operation.

Make-up tanks shall be provided with an eductor funnel or other appropriate arrangement for wetting the polymer during the preparation of the stock feed solution. Adequate mixing shall be provided by a large-diameter low-speed mixer.

19.2.4 Storage Facilities

19.2.4.1 Size

Storage facilities shall be sufficient to insure that an adequate supply of the chemical is available at all times. Exact size required will depend on size of shipment, length of delivery time, and process requirements. Storage for a minimum of 10-days supply shall be provided.

19.2.4.2 Location

The liquid chemical storage tanks and tank fill connections shall be located within a containment structure having a capacity exceeding the total volume of all storage vessels. Valves on discharge lines shall be located adjacent to the storage tank and within the containment structure. Containment areas shall be sloped to a sump area and shall not contain floor drains.

Bag storage shall be located near the solution make-up point to avoid unnecessary transportation and housekeeping problems.

19.2.4.3 Accessories

Platforms, ladders, and railings shall be provided as necessary to afford convenient and safe access to all filling connections, storage tank entries, and measuring devices.

Storage tanks shall have reasonable access provided to facilitate cleaning.

19.2.5 Other Requirements

19.2.5.1 Materials

All chemical feed equipment and storage facilities shall be constructed of materials resistant to chemical attack by all chemicals normally used for phosphorus treatment.

19.2.5.2 Temperature, Humidity and Dust Control

Precautions shall be taken to prevent chemical storage tanks and feed lines from reaching temperatures likely to result in freezing or chemical crystallization at the concentrations employed. A heated enclosure or insulation may be required. Provisions shall be made for temperature, humidity and dust control in all chemical feed room areas.

19.2.5.3 Cleaning

Consideration shall be given to the accessibility of piping. Piping shall be installed with plugged wyes, tees or crosses at changes in direction to facilitate cleaning.

19.2.5.4 Drains and Drawoff

Above-bottom drawoff from chemical storage or feed tanks shall be provided to avoid withdrawal of settled solids into the feed system. A bottom drain shall also be installed for periodic removal of accumulated settled solids.

19.2.6 Sludge Handling

19.2.6.1 General

Provisions shall be made for the type and additional capacity of the sludge handling facilities needed when chemicals are added.

19.2.6.2 Dewatering

Design of dewatering systems shall be based, where possible, on an analysis of the characteristics of the sludge to be handled. Consideration shall be given to the ease of operation, effect of recycle streams generated, production rate, moisture content, dewatering, final disposal, and operating cost.

19.3 HIGH RATE EFFLUENT FILTRATION

19.3.1 General

19.3.1.1 Applicability

Granular media filters may be used as a tertiary treatment device for the removal of residual suspended solids from secondary effluents. Where effluent suspended solids requirements are less than 10 mg/l, where secondary effluent quality can be expected to fluctuate significantly, or where filters follow a treatment process where significant amounts of algae will be present, a pre-treatment process such as chemical coagulation and sedimentation or other acceptable process should precede the filter units.

19.3.1.2 Design Considerations

Care should be given in the selection of pumping equipment ahead of filter units to minimize shearing of floc particles. Consideration should be given in the plant design to providing flow-equalization facilities to moderate filter influent quality and quantity.

19.3.1.3 Filter Types

Filters may be of the gravity type or pressure type. Pressure filters shall be provided with ready and convenient access to the media for treatment or cleaning. Where greases or similar solids which result in filter plugging are expected, filters should be of the gravity type.

19.3.3 Filtration Rates

19.3.3.1 Allowable Rates

Filtration rates shall not exceed 5 gpm/sq. ft. based on the maximum hydraulic flow rate applied to the filter units.

19.3.3.2 Number of Units

Total filter area shall be provided in 2 or more units, and the filtration rate shall be calculated on the total available filter area with one unit out of service.

19.3.4 Backwash

19.3.4.1 Backwash Rate

The backwash rate and procedure shall be appropriate for the filter media used, with fluidization capability or other means provided for dual or triple media filters to permit restratification of the layers in their desired positions at the end of the backwash. The backwash system shall be capable of providing a variable backwash rate having a maximum of at least 20 gpm/sq. ft. and a minimum backwash period of 10 minutes.

19.3.4.2 Backwash

Pumps for backwashing filter units shall be sized and interconnected to provide the required rate to any filter with the largest pump out of service. Filtered water shall be used as the source of backwash water. Waste filter backwash shall be returned to the plant influent for further treatment.

19.3.5 Filter Media

Selection of proper media size and type will depend on the filtration rate selected, the type of treatment provided prior to filtration, filter configuration, and effluent quality objectives. In dual or multi-media filters, media size selection must consider compatibility among media.

The media size and depth shall be selected to provide an effluent meeting the specific conditions and treatment requirements relative to the project under consideration. Furthermore, the head loss provided shall be appropriate for the media to ensure that the backwash volume required does not exceed 10 percent of the plant production when the plant is at design capacity.

19.3.6 Filter Appurtenances

The filters shall be equipped with washwater troughs, overflow troughs or a central gullet, surface wash or air scouring equip-

ment, means of measurement and positive control of the backwash rate, equipment for measuring filter head loss, positive means of shutting off flow to a filter being backwashed, and filter influent and effluent sampling points. If automatic controls are provided, there shall be a manual override for operating equipment, including each individual valve essential to the filter operation. The underdrain system shall be designed for uniform distribution of backwash water (and air, if provided) without danger of clogging from solids in the backwash water. Provision shall be made to allow periodic chlorination of the filter influent or backwash water to control slime growths.

19.3.7 Access and Housing

Each filter unit shall be designed and installed so that there is ready and convenient access to all components and the media surface for inspection and maintenance without taking other units out of service. Housing shall be provided for all filter units and all controls shall be enclosed. The structure housing filter controls and equipment shall be provided with adequate heating and ventilation equipment to minimize problems with excess humidity.

19.3.8 Backwash Surge Control

The rate of return of waste filter backwash water to treatment units shall be controlled such that the rate does not exceed 15 percent of the design average daily flow rate to the treatment units. The hydraulic and organic load from waste backwash water shall be considered in the overall design of the treatment plant. Where waste backwash water is returned for treatment by pumping, adequate pumping capacity shall be provided with the largest unit out of service.

19.3.9 Backwash Water Storage

Total backwash water storage capacity provided in an effluent clearwell or other unit shall equal or exceed the volume required for two complete backwash cycles although additional capacity shall be considered to allow for operational flexibility.

19.3.10 Proprietary Equipment

Where proprietary filtration equipment, such as shallow bed, traveling bridge, continuous backwash type filters, is proposed, data which supports the capability of the equipment to meet effluent requirements under design conditions shall be provided to the department for review on a case-by-case basis.

19.4 OTHER SUPPLEMENTAL TREATMENT PROCESSES

Other supplemental treatment processes, such as dissolved oxygen adjustment, pH adjustment, carbon adsorption, denitrification processes, biological phosphorus removal systems and other advanced treatment processes are available but have not been discussed in detail in this standard. This

does not preclude design engineers from submitting proposals for the application of such technologies where they may seem to offer appropriate solutions to wastewater treatment problems. After experience is gained with the use of such systems, consideration may be given to incorporating more detailed information in future revisions to these standards.

Microscreening has not been included in this standard because of many design, construction and operational problems which were reported on as a result of a preliminary assessment of several problem projects by the Environmental Protection Agency. The projects pertained to microscreening of pond effluents, but some of the problems could be expected on other type installations. Screen units have been redesigned and performance evaluations are being conducted but the results for the redesigned units are not yet available.

IOWA WASTEWATER FACILITIES DESIGN STANDARDS

CHAPTER 20

DISINFECTION

20.5 CHLORINE PIPING AND CONNECTIONS

20.5.1 General

20.5.2 Chlorine Piping

20.5.2.1 Chlorine Supply System
20.5.2.2 Injector Vacuum Lines
20.5.2.3 Chlorine Solution Lines
20.5.2.4 Nuts and Bolts

20.5.3 Diffusers

20.6 CHLORINE HOUSING

20.6.1 General

20.6.2 Inspection Window

20.6.3 Heat

20.6.4 Ventilation

20.6.5 Vents

20.6.6 Electrical Controls

20.7 CHLORINE RESPIRATORY PROTECTION

20.8 APPLICATION OF CHLORINE

20.8.1 Mixing

20.8.2 Contact Period

20.8.3 Contact Tank

20.9 OZONE

20.9.1 Feed Equipment

20.9.2 Capacity

20.9.3 Standby Equipment and Spare Parts

20.9.4 Piping

IOWA WASTEWATER FACILITIES DESIGN STANDARDS

CHAPTER 20

DISINFECTION

20.1 GENERAL

20.1.1 Applicability

This chapter is applicable to construction, installation or modification of any disposal system required to obtain a construction permit from this Department under the Iowa Code Section 455B.183 and 900--64.2 of the Iowa Administrative Code.

20.1.2 Variances [900--64.2(9)"c" I.A.C.]

When engineering justification satisfactory to the executive director is provided substantially demonstrating that variation from the design standards or siting criteria will result in either: at least equivalent effectiveness while significantly reducing costs, or improved effectiveness, such a variation from design standards or siting criteria may be accepted by the executive director.

20.1.3 Explanation of Terms

The terms "shall" or "must" are used in these standards when it is required that the standard be used. Other terms such as "should" and "recommended" indicate desirable procedures or methods which should be considered but will not be required.

20.2 PROCESS SELECTION

20.2.1 Applicability

The disinfectants discussed in this chapter include chlorine, calcium or sodium hypochlorite, chlorine dioxide, ozone, bromine and ultra-violet radiation. These disinfectants can be used as appropriate to treat wastewater which requires disinfection.

20.2.2 Specific Process Selection

Chlorination is the most commonly used method for wastewater disinfection. The forms most often used are liquid or gaseous chlorine and calcium or sodium hypochlorite. Other disinfectants, including chlorine dioxide, ozone, bromine or ultra-violet radiation may be accepted by the Department. The chemical or method should be selected after due consideration of waste flow rates, application and demand rates, pH of the wastewater, cost of equipment, chemical availability, reliability and maintenance problems. If chlorination is utilized, it may be necessary to dechlorinate to meet discharge permit limitations.

20.3 CHLORINE FEED EQUIPMENT

20.3.1 Type

Solution-feed vacuum-type chlorinators are generally preferred for large chlorination installations. The use of hypochlorite feeders of the positive displacement type should be considered when flow discharge is intermittent. The preferred method of generation of chlorine dioxide is the injection of a sodium chlorite solution into the discharge line of a solution-feed gas-type chlorinator, with subsequent formation of the chlorine dioxide in a reaction chamber at a pH of 4.0 or less.

20.3.2 Capacity

Required disinfection capacity will vary, depending on the uses and points of application of the disinfection chemical. For disinfection, the capacity shall be adequate to produce an effluent that will meet the limits specified by the Department for that installation. For domestic wastewater, the following may be used as an estimating guide in sizing chlorination facilities.

Type of Treatment	Chlorine Dosage, mg/l (based on flow)
Primary effluent	15
Trickling filter plant effluent	10
Activated sludge plant effluent	8
Tertiary filtration effluent	6
Nitrified effluent	6

When industrial wastes are present, laboratory estimation of chlorine demand may be necessary.

Equipment shall be provided to handle the entire range of expected flows and dosages throughout the design period.

20.3.3 Standby Equipment and Spare Parts

Where disinfection is required for the entire year, standby equipment of sufficient capacity shall be installed to provide disinfection with the largest unit out of service. Spare parts shall be available for all disinfection equipment to replace parts which are subject to wear and breakage.

20.3.4 Water Supply

An ample supply of water shall be available for operating the chlorinator injector. The water source can be either potable water or effluent taken from the chlorine contact chambers. When a booster pump is required, duplicate equipment or an al-

ternate water supply shall be provided. Protection of a potable water supply shall conform to the requirements of Section 14.7.1, Water Supply.

20.3.5 Automatic Switchover

Where disinfection is required for the entire year, automatic switchover of chlorine cylinders or containers shall be provided.

20.3.6 Dosage Control

For plants with less than 3000 P.E., automatic chlorine feed-rate control will not be required.

Plants for more than 3000 P.E. shall be provided with chlorine feed-rate control proportional to the waste water flow.

In all cases where dechlorination is required, a compound loop control system should be considered.

20.4 CHLORINE SUPPLY

20.4.1 Tank Cars

At large chlorination installations, consideration should be given to the use of tank cars, generally accompanied by evaporators. Liquid chlorine lines from tank cars to evaporators shall be buried and installed in a conduit and shall not enter below grade spaces. Systems shall be designed for the shortest possible pipe transportation of liquid chlorine.

20.4.2 Scales

Scales or load cells for weighing cylinders or ton containers shall be provided at all plants using chlorine gas. Scales shall be provided for each cylinder or container in service; one scale is adequate for a group of cylinders or containers connected to a common manifold. At large plants, scales of the indicating and recording type are recommended. Scales shall be of corrosion-resistant material.

20.4.3 Evaporators

Where manifolding of several containers will be required to evaporate sufficient chlorine, consideration should be given to the installation of evaporators, to produce the quantity of gas required.

20.4.4 Leak Detection and Alarms

A bottle of 56% ammonium hydroxide solution shall be available for detecting chlorine leaks.

All installations utilizing 2,000 pound cylinders shall have suitable continuous chlorine leak detectors. Continuous chlorine leak detectors should be considered at all other installations. Whenever chlorine leak detectors are installed, they shall be connected to a centrally located alarm system and should automatically start exhaust fans.

20.4.5 Handling Equipment

The following handling equipment shall be provided.

20.4.5.1 100 and 150 pound Cylinders

1. A hand-truck specifically designed for cylinders.
2. A method of securing cylinders to keep them upright.

20.4.5.2 Ton Containers

1. Two-ton capacity hoist.
2. Container lifting bar.
3. Monorail or hoist with sufficient lifting height to pass one container over another.
4. Cylinder trunnions to allow rotating the container for proper connection.

20.5 CHLORINE PIPING AND CONNECTIONS

20.5.1 General

Piping systems shall be as simple as possible, specifically selected and manufactured to be suitable for chlorine service, with a minimum number of joints. Piping should be well supported and protected against temperature extremes. Due to the corrosiveness of moist chlorine gas, all lines designed to handle dry chlorine gas should be protected from the entrance of water or air containing water.

20.5.2 Chlorine Piping

20.5.2.1 Chlorine Supply System

That portion of the system between the cylinder or ton container and the chlorinator inlet should be constructed of Schedule 80 black seamless steel pipe with 2,000 pound forged steel fittings. Unions should be ammonia type with lead gaskets; never use a ground joint union. The use of bushings should be avoided; use reducing fittings.

All valves shall be Chlorine Institute approved.

Gauges shall be equipped with a silver diaphragm protector.

Piping can be assembled by either welded or threaded connections. All threaded pipe must be cleaned with a solvent, preferably trichloroethylene and dried with nitrogen gas or dry air. Teflon tape should be used for thread lubricant in lieu of pipe tape.

20.5.2.2 Injector Vacuum Lines

The vacuum lines between the chlorinator and the injector should be Schedule 80 PVC or fiber glass pipe approved for moist chlorine gas use.

20.5.2.3 Chlorine Solution Lines

The chlorine solution lines can be Schedule 80 PVC; fiber glass; PVC-, Saran-, or rubber-lined steel; polyethylene tubing; or rubber hose with either natural or reclaimed rubber lining, all approved for moist chlorine gas use. Valves shall be PVC, PVC-lined, or rubber-lined.

Gauges should be provided to show the injector operating water pressure and the chlorine solution pressure. The chlorine solution gauge must be a compound unit reading to 30 inches Hg vacuum and to a pressure greater than the anticipated operating pressure. The gauge must also be equipped with a silver diaphram protector.

20.5.2.4 Nuts and Bolts

Nuts and bolts used on piping systems should be 316 stainless steel, galvanized or cadmium plated steel.

20.5.3 Diffusers

Diffusers located in open channels are of two general types: a series of nozzles suspended from a flexible hose and a perforated pipe across the channel; the latter being the preferred type. Both types must be located in a highly turbulent zone with a minimum water cover of nine inches.

The minimum recommended velocity through the diffuser holes is 10-12 feet per second. All diffusers should be removable for cleaning.

20.6 CHLORINE HOUSING

20.6.1 General

If gas chlorination equipment or chlorine cylinders are to be in a building used for other purposes, a gas-tight room shall separate this equipment from any other portion of the building. There must not be any means by which chlorine gas can enter other areas of a common building. Floor drains from the chlorine room shall not be connected to floor drains from other rooms. Doors to this room shall open only to the outside of the building, and shall be equipped with panic hardware. Areas housing chlorinators and chlorine cylinders or containers in use shall be located on or above ground level.

The storage area should be separated from the feed area. Chlorine cylinder or container storage areas shall be located on or above ground level and shaded from direct sunlight.

Chlorination equipment should be situated as close to the application point as reasonably possible.

Chlorination systems should be protected from fire hazards and water should be available for cooling cylinders in case of fire.

There must be adequate room provided for easy access to all equipment for maintenance and repair. The minimum acceptable clearance around and in back of equipment is two feet, except for units designed for wall or cylinder mounting.

20.6.2 Inspection Window

A clear glass window shall be installed in an exterior door or interior wall of the chlorinator room to permit the units to be viewed without entering the room. The window shall be gas-tight if installed in an interior wall. Windows in both the door and wall are recommended.

20.6.3 Heat

Rooms containing disinfection equipment shall be provided with a means of heating so that a temperature of at least 60°F can be maintained. Cylinders or containers in a separate room shall be kept at a temperature equal to or slightly less than the chlorinator room, except when liquid chlorine is withdrawn from 2,000 pound containers.

20.6.4 Ventilation

With chlorination systems, forced, mechanical ventilation shall be installed which will provide one complete air change every four minutes when the room is occupied and one complete air change every fifteen minutes at all times. The inlet to the air exhaust duct from the room shall be near the floor and the point

of discharge shall be so located as not to contaminate the air inlet to any buildings. Air inlets and exhausts shall be so located as to provide cross ventilation and at such temperature that will not adversely affect the chlorination equipment.

20.6.5 Vents

Chlorinators and some accessories require individual vents to a safe outside area. The vent should terminate not more than 25 feet above the chlorinator or accessory and have a slight downward slope from the highest point. The outside end of the vent should bend down to preclude water entering the vent and be covered with an insect screen.

20.6.6 Electrical Controls

Electrical controls for lights and fans should operate automatically when entrance doors are opened. Manually controlled over-ride switches shall be located adjacent to and outside of all entrance doors with an indicator light indicating fan operation at each entrance. Electrical controls shall be excluded, insofar as possible, from chlorine rooms.

20.7 CHLORINE RESPIRATORY PROTECTION

Respiratory air-pac protection equipment of the pressure-demand type, meeting the requirements of the National Institute for Occupational Safety and Health (NIOSH), shall be available where chlorine gas is handled. The equipment shall be stored at a convenient location near the chlorine room, but not inside any room where chlorine is used or stored. Instructions for using the equipment shall be posted. The units shall use compressed air, have at least 30-minute capacity, and be compatible with the units used by the fire department responsible for the plant.

20.8 APPLICATION OF CHLORINE

20.8.1 Mixing

The disinfectant shall be positively mixed as rapidly as possible, with a complete mix being affected in three seconds and prior to entering the contact chamber. This may be accomplished by the use of turbulent flow regime (hydraulic jump), mechanical flash mixer or jet disinfection. The mixer shall be located at or immediately downstream from the point of chlorine injection and the mixing chamber shall be as small as possible.

20.8.2 Contact Period

For a chlorination system, a minimum period of 30 minutes detention at AWW flow or 15 minutes detention at PHWW flow, whichever is greater, shall be provided after thorough mixing. If dechlorination is required, no contact time is necessary after

complete mixing of the effluent with the dechlorination chemical.

20.8.3 Contact Tank

The chlorine contact tank shall be constructed so as to reduce short-circuiting of flow to a practical minimum. "End-around" baffling for serpentine flow shall be provided to minimize short-circuiting. Baffles shall be designed to provide a length-to-width ratio of at least 40 to 1.

Duplicate tanks (each equal to half of the required volume), mechanical scrapers, or portable deck-level vacuum cleaning equipment shall be provided to facilitate maintenance and cleaning. Drainage from contact tanks shall be discharged to the head end of the plant. Baffles shall be provided to prevent the discharge of floating material and provision shall be made for removal of floating solids.

20.9 OZONE

20.9.1 Feed Equipment

Ozone dissolution is accomplished through the use of conventional gas diffusion equipment, with appropriate consideration of materials. When ozone is being produced from air, gas preparation equipment (driers, filters, compressors) is required. When ozone is being produced from pure oxygen, this equipment may not be needed.

20.9.2 Capacity

Required disinfection capacity will vary, depending on the uses and points of application of the disinfection chemical. For disinfection, the capacity shall be adequate to produce an effluent that will meet the limits specified by the Department for that installation. Ozone systems proposed to meet disinfection requirements will be reviewed on a case-by-case basis.

Equipment shall be provided to handle the entire range of expected flows and dosages throughout the design period.

20.9.3 Standby Equipment and Spare Parts

Where disinfection is required for the entire year, standby equipment of sufficient capacity shall be installed to provide disinfection with the largest unit out of service. Spare parts shall be available for all disinfection equipment to replace parts which are subject to wear and breakage.

20.9.4 Piping

Piping systems shall be as simple as possible, specifically selected and manufactured to be suitable for ozone service, with a

minimum number of joints. Piping should be well supported and protected against temperature extremes.

The selection of material should be made with due consideration for ozone's corrosive nature. Copper or aluminum alloys should be avoided. Only materials at least as corrosion-resistant to ozone as Grade 304 L stainless steel should be specified for piping containing ozone in nonsubmerged applications. Unplasticized PVC, Type 1, may be used in submerged piping, provided the gas temperature is below 140°F and the gas pressure is low.

20.9.5 Housing

20.9.5.1 General

If ozone generation equipment is to be in a building used for other purposes, a gas-tight room shall separate this equipment from any other portion of the building. Doors to this room shall open only to the outside of the building, and shall be equipped with panic hardware.

There must be adequate room provided for easy access to all equipment for maintenance and repair. The minimum acceptable clearance around and in back of equipment is two feet.

20.9.5.2 Inspection Window

A clear glass window shall be installed in an exterior door or interior wall of the ozone generator room to permit the units to be viewed without entering the room. The window shall be gas-tight if installed in an interior wall. Windows in both the door and wall are recommended.

20.9.5.3 Heat

The room containing the ozone generation units shall be maintained above 35°F at all times.

20.9.5.4 Ventilation

For ozonation systems, continuous ventilation to provide at least one complete air change ever ten minutes should be installed. The inlet to the air exhaust duct from the room shall be near the floor and the point of discharge shall be so located as not to contaminate the air inlet to any buildings. Air inlets and exhausts shall be so located as to provide cross ventilation and at such temperature that will not adversely affect the ozone generation equipment.

20.9.5.5 Electrical Controls

Electrical controls for lights and fans should operate automatically when entrance doors are opened. Manually controlled override switches shall be located adjacent to and outside of all entrance doors with an indicator light indicating fan operation at each entrance. Electrical controls shall be excluded, insofar as possible, from ozone generation rooms.

20.9.6 Application of Ozone

20.9.6.1 Mixing

The disinfectant shall be positively mixed as rapidly as possible, with a complete mix being affected in three seconds and prior to entering the contact chamber. This may be accomplished by the use of turbulent flow regime (hydraulic jump), mechanical flash mixer or jet disinfection. The mixer shall be located at or immediately downstream from the point of ozone injection and the mixing chamber shall be as small as possible.

20.9.6.2 Contact Period

The required contact time for an ozonation unit varies with the type of dissolving equipment used. Certain high rate devices require contact times less than one minute to achieve disinfection while conventional dissolving equipment may require contact times similar to chlorination systems.

20.9.6.3 Contact Tank

The ozone contact tank shall be constructed so as to reduce short-circuiting of flow to a practical minimum. "End-around" baffling for serpentine flow shall be provided to minimize short-circuiting. Baffles shall be designed to provide a length-to-width ratio of at least 40 to 1.

Duplicate tanks (each equal to half of the required volume), mechanical scrapers, or portable deck-level vacuum cleaning equipment shall be provided to facilitate maintenance and cleaning. Drainage from contact tanks shall be discharged to the head end of the plant. Baffles shall be provided to prevent the discharge of floating material and provision shall be made for removal of floating solids.

20.10 BROMINE

Bromine has had limited use for disinfection, mostly due to high cost and handling difficulties. There has been successful use of bromine in stick form for swimming pool disinfection. The stick is a compound of both bromine and chlorine known as bromo-chloro-dimethyl hydantion (Dihalo), and is used in conjuntion with a stick feeder. A discussion of bromine and its application for disinfection may be found in "White, George Clifford, Handbook of Chlorination, Van Nostrand Reinhold Company, 1972, pp. 707-713".

20.11 ULTRA-VIOLET RADIATION

The following requirements shall apply for the use of ultra-violet radiation units for disinfection:

1. Ultra-violet radiation at a level of 2,537 angstrom units must be applied at a minimum dosage of 16,000 microwatt-seconds per square centimeter at all points throughout the waste water disinfection chamber.

2. Maximum water depth in the chamber, measured between tube surfaces or from the tube surface to the chamber wall, shall not exceed three inches for low intensity units or eight inches for high intensity units.

3. The ultra-violet tubes shall be:

   a. Jacketed or otherwise designed so that a proper operating tube temperature of about 105°F is maintained for low intensity units. High intensity units should not be affected by water temperatures between 35° and 85°F.

   b. The jacket shall be of quartz or high silica glass with similar optical characteristics.

4. A time delay mechanism shall be provided to permit a two-to-five minute tube warm-up period before water flows from the unit, as recommended by the manufacturer.

5. The unit shall be designed to permit frequent mechanical, chemical or ultrasonic cleaning of the water contact surface of the jacket without disassembly of the unit.

6. An automatic flow control valve, accurate within the expected pressure range, or suitable weirs shall be installed to restrict flow to the maximum design flow of each treatment unit, or a dual set point flow meter shall be provided to accurately measure the minimum and maximum flows allowed by the unit.

7. An adequate number of ultra-violet intensity meters calibrated in accordance with the standards set forth by the Bureau of Standards and properly filtered to restrict sensitivity to the disinfection

spectrum shall be installed in the wall of each disinfection chamber at the points of greatest water depth from the tubes.

8. An automatic audible alarm shall be installed to warn of malfunction or shutdown of the unit. Flow shall be directed automatically to the standby unit if disinfection is required for the entire year.

9. The unit shall be designed to protect the operator against electrical shock or excessive radiation.

10. Electrical controls shall be installed in a locked and protected enclosure not subject to extremes of temperature which could cause malfunction. The design shall provide that power must be shut off prior to opening the enclosure.

11. Where disinfection is required for the entire year, multiple units (including controls and electrical gear) shall be provided so that with the largest unit out of service the remaining units shall have the capacity to handle the PHWW flow.

12. A hand-held photocell with light filters, meter and mounting cradle shall be provided to check the wave length output of the ultra-violet lamps prior to installation.

13. Provisions shall be made for continuous monitoring of the power status of each lamp using individual pilot lights (light-emitting diodes).

14. Provisions shall be made for adequate cooling of the ultra-violet control panels to avoid premature shutdown due to overheating.

20.12 DECHLORINATION

1. Dechlorination shall be provided in accordance with discharge permit requirements.

2. Dechlorination chemicals shall be rapidly mixed with the effluent.

3. Sulfur dioxide dechlorination systems shall be designed with the same equipment as chlorination systems for maximum interchangeability.

4. Effluent reaeration shall be provided after dechlorination if necessary to insure adequate dissolved oxygen concentration in the receiving stream.

5. Dechlorinated effluent shall be monitored for chlorine residual and dissolved oxygen in accordance with discharge permit requirements.

20.13 EVAULATION OF EFFECTIVENESS

20.13.1 Sampling

Facilities shall be included for sampling the disinfected effluent after contact. In large installations, or where stream conditions warrant, provisions should be made for continuous monitoring of effluent chlorine residual. All sample lines should be designed so that they can be easily purged of slimes and other debris.

20.13.2 Testing and Control

If chlorine is the disinfectant, appropriate equipment shall be provided for measuring chlorine residual using accepted test procedures.

Adopted April 25, 1979

IOWA WASTEWATER FACILITIES DESIGN STANDARDS

CHAPTER 21

Land Application Of Wastewater

IOWA WASTEWATER FACILITIES DESIGN STANDARDS

CHAPTER 21

Land Application of Wastewater

21.1 GENERAL DESIGN CONSIDERATIONS

The following design considerations apply to two methods of wastewater application on land: slow rate (irrigation), and overland flow. The engineering report shall contain pertinent information on the proposed site(s) including: location, geology, soil conditions, area for expansion, groundwater conditions and any other factors which may affect the feasibility and acceptability of the proposal. The engineering report shall also include pretreatment and storage requirements, a management program stating the objectives of the land application, the design application rates and monitoring. The source should be given for any information used by the consultant in design.

21.1.1 Site Considerations

21.1.1.1 Site Identification

The following information concerning the site shall be provided:

a. Legal description of the disposal site.

b. The location, use, and ownership of all existing and proposed residences, commercial or industrial developments, roads, ground or surface water supplies and wells within one-half mile of the proposed site.

c. Available land area, both gross and net areas (i.e., excluding roads, right-of-way encroachments, stream channels, and unusable soils).

d. Distance from the pretreatment and the storage facilities to the application site, including elevation differential.

e. Proximity of site to industrial, commercial, residential developments; surface water streams; potable water wells; public use areas such as parks, cemeteries, or wildlife sanctuaries.

f. Present and future land and groundwater uses.

g. Location, depth and outlet of known field drain tiles on the site.

h. A summary describing the existing vegetation of the area.

i. A description, including maps showing elevations and contours, of the site and adjacent areas which may be suitable for expansion. Specific information on the maximum and average slopes of the site must be provided.

21.1.1.2 Site Criteria

a. Wetted Disposal Area

The wetted disposal area must conform to the following criteria. For the distance requirements below, the wetted disposal area is the land area which is normally wetted by wastewater application.

1. Flood prone areas which flood at a frequency greater than once every ten (10) years should not be the sole source of land disposal. (Information on which land is subject to flooding more frequently than once in ten (10) years is available from this Department.)

2. The wetted disposal area shall be established at least 300 feet from existing dwellings or public use areas. Public use areas do not include roads or highways. In addition, the wetted disposal area shall be at least 50 feet inside the property line on all sides of the land application site. Distances may be reduced depending upon the extent of pretreatment and operational techniques such as ridge and furrow irrigation.

3. The wetted disposal area shall be at least 400 feet from any existing potable water supply well not located on the property. Adequate protection shall be provided for wells located on the disposal site.

4. The wetted disposal area shall be at least 300 feet from any structure, continuous flowing stream or other physiographic feature that may provide direct connection between the ground water table and the surface.

5. The disposal area shall be posted along roads and public use areas. A minimum of one sign shall be placed on each side of the disposal area. The perimeter distance between any two signs shall not exceed 500 feet. Each sign shall clearly identify the nature of the facility and advise against trespassing in letters not less than 2 inches high.

21.1.2 Groundwater

21.1.2.1 Fieldwork Determination

As a minimum, fieldwork shall determine:

a. Depth to normal groundwater

b. General groundwater flow conditions.

c. Depth, area and duration of maximum groundwater.

d. Direction of flow.

21.1.2.2 Initial Groundwater Quality

Groundwater tests for the following constituents shall be conducted at sufficient locations to provide information on the initial groundwater quality. The number, location, and depth of monitoring wells needed to monitor these constituents shall be included.

a. Total organic carbon (TOC).

b. Total dissolved solids, sodium absorption ratio, and electrical conductivity.

c. Total nitrogen, ammonia nitrogen, organic nitrogen and nitrate nitrogen.

d. Total phosphorus.

e. Chloride.

f. pH.

g. Alkalinity.

h. Hardness.

i. Trace elements.

(1) Aluminum
(2) Arsenic
(3) Berylium
(4) Boron
(5) Cadmium
(6) Chromium
(7) Cobalt
(8) Copper
(9) Fluoride
(10) Iron
(11) Lead
(12) Lithium
(13) Manganese
(14) Molybdenum
(15) Nickel
(16) Selenium
(17) Zinc

j. Coliform Bacteria.

21.1.3 Geological Information

21.1.3.1 Soil Profile

a. Soil Testing

1. A description of the material underlying the proposed site is required. This shall include stratigraphic sections based on a number of borings adequate to accurately determine the geology of the proposed site, unless the department agrees that an equivalent description may be obtained without borings. A drilling location plan and drilling log shall be submitted for each series of samples. Soil borings shall be conducted by a qualified organization normally engaged in soil testing activities to determine subsurface soil characteristics. Additional information, including additional borings, may be required for any additional locations of specific concern to the department.

2. The stratigraphic sections shall be described from the surface to a depth 25 feet or to bedrock, whichever is less.

3. The soil at a potential site shall be identified in each soil layer in terms of its hydraulic, physical, and chemical characteristics. Required physical characteristics include texture, structure, and soil depth. Required hydraulic characteristics are infiltration rate and permeability of the most restrictive layer. Chemical characteristics required include pH, cation exchange capacity, nutrient levels, the adsorption and filtration capabilities for various inorganic ions, heavy metals, and phosphorous adsorption. These characteristics shall be identified from the surface to a depth of 5 feet. An explanation of these various tests are provided in Appendix "F" of the EPA Process Design Manual for Land Treatment of Municipal Wastewater (EPA 625/1-77-008).

b. Other Profile Information

The geological information shall also provide the degree of weathering of any shallow bedrock; the local bedrock structure, including the presence of faults, fractures and joints; and in limestone terrain, additional information about sinkholes and solution openings.

21.1.3.2 Soil Requirements

a. Wetted Disposal Area

The wetted disposal area shall have a soil mantle of at least 5 feet overlaying any sand or gravel strata.

b. Erosion Control

The topography of the site and adjacent land shall be evaluated for areas of potential erosion. The effects of both applied wastewater and storm runoff shall be considered. Special consideration should be given to the period of construction and system startup, when vegetative cover may be lacking or not fully developed.

21.1.4 Initial Wastewater Analysis

An initial analysis of the untreated wastewater must be conducted. The analysis shall consist of at least one week of daily composites. The constituents to be monitored are those listed in 21.1.2.2.

21.1.5 Preapplication Treatment

As a minimum, treatment prior to land application, shall provide treatment equivalent to that obtained from a primary lagoon cell constructed and designed in accordance to Chapter 18C of these standards. The maximum organic loading on the primary cell(s) (based upon the total water surface area of the primary cell(s) at the maximum water depth of six feet) shall not exceed 25 pounds BOD_5/acre/day. The minimum drawoff level of the primary cell shall be at the two foot level. Drawoff for direct wastewater application must be from the storage cells. Piping shall be arranged such that the drawoff from the primary cell cannot be used for direct wastewater application.

Additional treatment may be required to obtain and maintain the limitations determined or stated in the remaining portion of this section. The additional treatment will be weighed against the alternative of increasing the amount of land.

21.1.6 Land Application Facility

21.1.6.1 Hydraulic Loading Rate

The hydraulic loading rate shall be determined by utilizing a water balance per month of operation. This shall contain sufficient supporting information for its use.

The hydraulic loading is based on a water balance that includes precipitation, infiltration rate, evapotranspiration, soil storage capabilities, and subsoil permeability. Generally, the total monthly application should be distributed uniformly, but considerations must be made for planting, harvesting, drying, and other

nonapplication periods. The application rate must then be balanced as shown in the following equation:

$$L_w + Pr = ET + W_p + R$$

where L_w = wastewater hydraulic loading rate, in./mo.
Pr = design precipitation, in./mo.
ET = evapotranspiration, in./mo.
Wp = percolating water, in./mo. [must = 0 for overland flow systems]
R = net runoff, in./mo. [must = 0 for slow rate system]

The relationship in the above equation can be used for a weekly balance, a monthly balance as shown, or an annual balance. Design precipitation is calculated from a 10 year return frequency analysis of wetter-than-normal conditions using data available from the Soil Conservation Service, the National Oceanic and Atmospheric Administration (NOAA), local airports or newspapers. Evaporation estimates can be obtained from extension specialists and from the sources listed above.

The option presented in section 21.1.7.4 may alter the above balance. Use of the option will require a full explanation of changes to this balance.

System design calls for an application schedule broken up into months. Utilizing the above equation the applicant must calculate the amounts of wastewater to be applied each month. For evapotranspiration to be used, the applicant must consult an extension service and use no more than the evapotranspiration expected for the appropriate crop and application technique.

For slow rate systems, percolating water (Wp) shall be restricted to a maximum of 10 inches per month unless the applicant submits documentation from an agronomist or soil specialist verifying a greater percolating value.

21.1.6.2 Nitrogen Loading

a. Nitrogen Balance

The total nitrogen from wastewater, commercial fertilizer or any other source shall be balanced against the expected nitrogen demand of the crop. The total poundage of nitrogen loading shall be calculated from the total volume of wastewater applied per year and the concentration of nitrogen (Kjeldahl plus nitrate) in the wastewater. Due to denitrification in soil, a maximum loss of 20% of the applied nitrogen annual loading is allowed. The annual nitrogen balance shall be calculated by the following equation:

$$L_n + K = U + D + 2.7\ WpCp$$

where $L_n = 2.7\ C_n L_w$ = wastewater nitrogen loading (lb/acre-yr.).

where C_n = applied nitrogen concentration from the pretreatment facility (mg/l).

L_w = wastewater hydraulic loading, ft/yr.

2.7 = conversion factor.

K = All other nitrogen sources, lb/acre-yr.
U = Crop nitrogen uptake, lb/acre-yr.
D = Denitrification, lb/acre-yr.
2.7 = Conversion factor
Wp = Percolating water, ft/yr.
Cp = Percolate nitrogen concentration, mg/l.

b. Percolate

The total nitrogen in the percolate shall not exceed 10 mg/l.

21.1.6.3 Phosphorus Loading

Phosphorus loading is to be addressed when both (1) the concentration of applied phosphorus exceeds 15 mg/l and (2) when the soil pH after association with the wastewater is less than six. When the above applies, the potential of soil plugging and site longevity with respect to phosphorus must be evaluated.

21.1.6.4 Trace Element Loading

The total individual trace element loadings shall not exceed the following. Application rates shall be based on a minimum site-life of 30 years.

Metal	Soil cation exchange capacity (21-A) (meq/100 g)*		
	< 5	5 to 15	> 15
	Maximum amount of metal (lb/acre)		
Lead (Pb)	500	1,000	2,000
Zinc (Zn)	250	500	1,000
Copper (Cu)	125	250	500
Nickel (Ni)	50	100	200
Cadmium (Cd)	5	10	20

* Determined by the pH 7 ammonium acetate procedure.

If the treatment works has other toxic constituents in its wastewater, the wastewater shall not contain the other toxic constituents in excess levels determined by the Department to pose a threat to human, animal or plant life.

21.1.6.5 Salinity Restrictions

The wastewater classification $C_1 - S_1$ (Figure 1) is an acceptable range for applying waste water to soil. Classifications $C_1 - S_2$, $C_2 - S_2$ and $C_2 - S_1$, will also be acceptable provided that the applicant demonstrates that there is sufficient leaching available to eliminate salinity problems. The remaining classifications will generally not be acceptable for land application in Iowa.

Table 1, Table 2 and Figure 2 are to be used when determining leaching. Interpolation may be necessary to obtain the electric conductivity of the appropriate crop.

21.1.6.6 Disinfection

Disinfection shall be provided for all land application systems which intend to employ any type of spray application technique. Disinfection must precede actual spraying of the wastewater on to a field area and must not precede storage. The design shall provide a minimum contact time of 15 minutes with equipment necessary to maintain a residual chlorine level of 0.5 mg/l.

21.1.6.7 Crops and Vegetation

a. Crop Information

A description of the crops or vegetation to be grown are required for all systems in which vegetation is to be an integral part of the treatment system. This includes all slow rate and overland flow systems. The use of wastewater for irrigation of truck farms growing vegetables is prohibited. There shall be no direct consumptive use of the crop. The following information shall be provided:

1. Compatibility of the crop with site characteristics and design hydraulic loading rates.

2. Nutrient uptake.

3. Cultivation and harvesting requirements.

4. Crop management.

b. Crop Removal

The aerial or leafy shoot portion of the vegetative cover of grasses or forbs, if such are the main cover, shall be harvested at least annually.

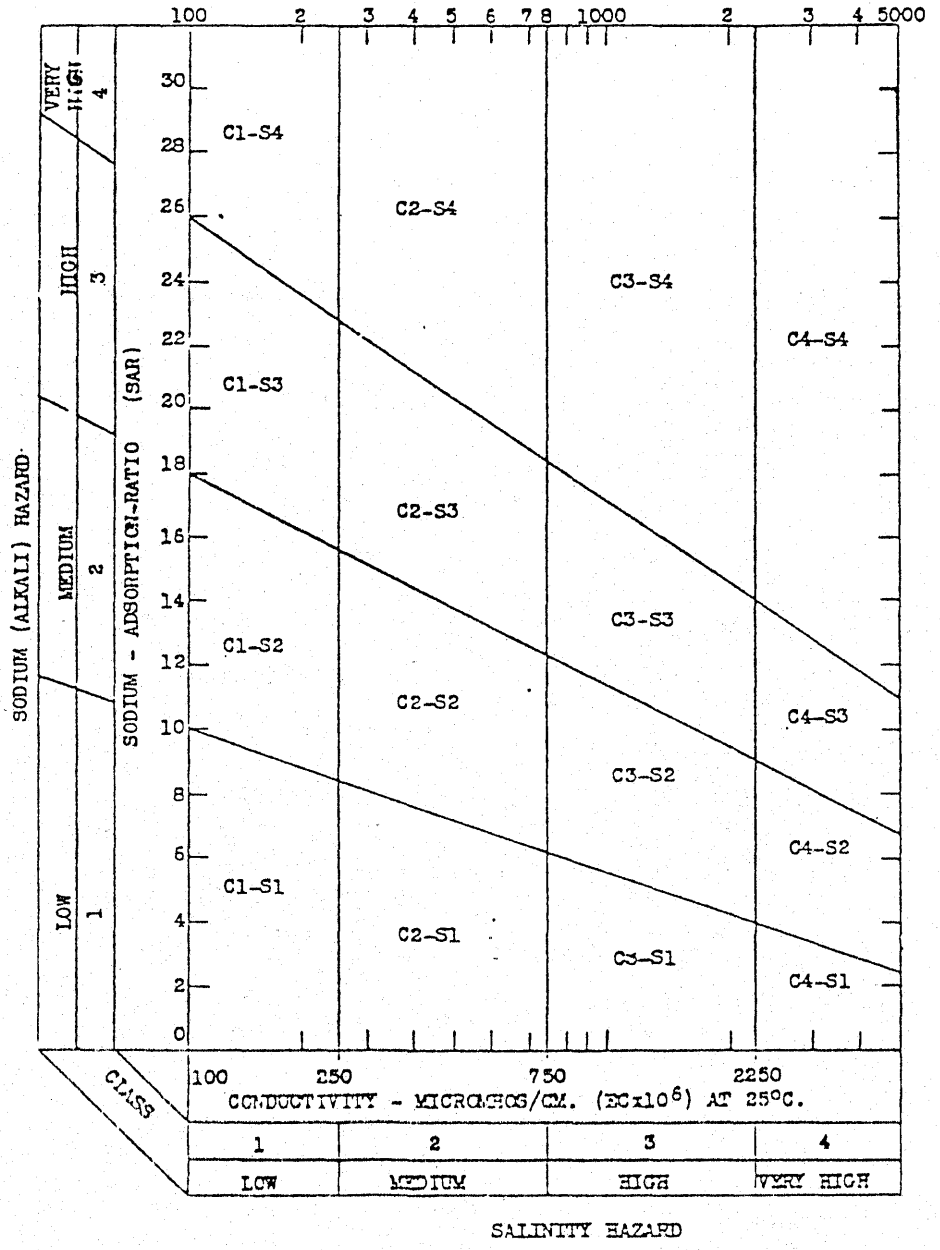

FIGURE I
Diagram for the classification of irrigation waters. (21-B)

TABLE 1. THE SALT TOLERANCE OF FORAGE CROPS (AS INDICATED BY THE ELECTRICAL CONDUCTIVITY OF SATURATED SOIL EXTRACT) (21-C)

High Tolerance 18,000 micromhos/cm	Medium Tolerance 12,000 micromhos/cm	Low Tolerance 4,000 micromhos/cm
Saltgrass	White sweetclover	White Dutch clover
Bermuda grass	Yellow sweetclover	Meadow foxtail
Canada wildrye	Perennial ryegrass	Alsike clover
Western wheatgrass	Sudan grass	Red clover
Barley (hay)	Hubam clover	Ladino clover
Birdsfoot trefoil	Alfalfa (Calif. common)	
	Tall fescue	
	Rye (hay)	
	Wheat (hay)	
	Oats (hay)	
	Orchardgrass	
	Meadow fescue	
	Reed canary	
	Smooth brome	
12,000 micromhos/cm	4,000 micromhos/cm	2,000 micromhos/cm

TABLE 2. THE SALT TOLERANCE OF FIELD CROPS (AS INDICATED BY THE ELECTRICAL CONDUCTIVITY OF SATURATED SOIL EXTRACT) (21-D)

High Tolerance 18,000 micromhos/cm	Medium Tolerance 10,000 micromhos/cm	Low Tolerance 4,000 micromhos/cm
Barley (grain)	Rye (grain)	Field beans
Sugar beet	Wheat (grain)	
Rape	Oats (grain)	
Cotton	Rice	
	Sorghum (grain)	
	Corn (field)	
	Flax	
	Sunflower	
	Castor beans	
10,000 micromhos/cm	6,000 micromhos/cm	

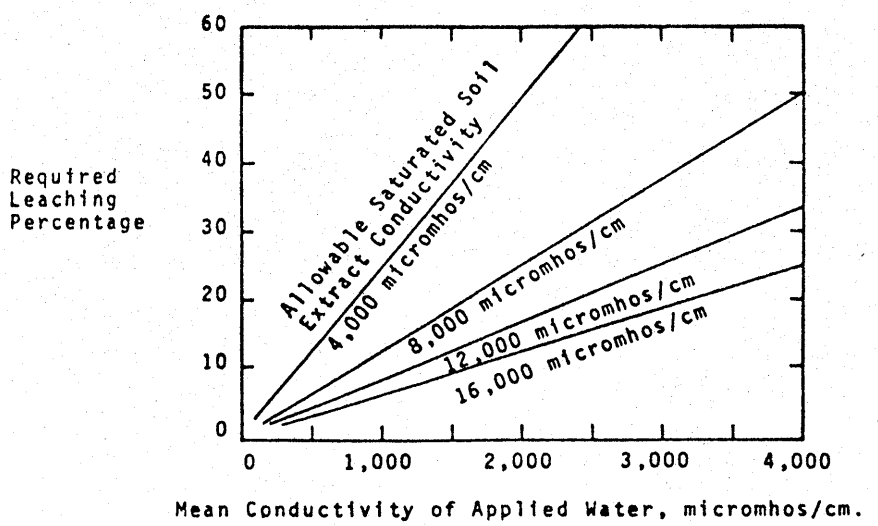

Figure 2 Required Leaching Percentage (21-C)

21.1.7 Storage Facility

21.1.7.1 Storage Time

Figure 3 depicts the minimum days of storage based on climatic restraints. In some cases the minimum number of storage days (see figure 3) may have to be increased to accommodate months in which the precipitation exceeds or equals the percolate plus evapotranspiration.

An exception to this is a system where flows are generated only during the application period. A storage capacity of 45 days or the flow generated during the period of operation, whichever is less, must be provided.

21.1.7.2 Construction

In general, the construction of a storage lagoon shall conform with 18C of these standards. The maximum total water depth shall not exceed 10 feet. The minimum drawoff shall be at the two foot level.

21.1.7.3 Reliability

There shall be a minimum of two storage cells with the capability of series and parallel operation.

21.1.7.4 Storage Option

Because of the lengthy storage requirement, an option to discharge from the storage facility to a receiving waterway on a periodic basis may, in some cases, be cost effective. To utilize this option the applicant will be required to provide storage for 180 days of average wet weather flow. However, the storage facility shall be designed in accordance with Chapter 18C of these standards (i.e. 8 foot maximum operating depth in the storage cells). This option will require an Iowa NPDES Operation Permit as well as a schedule noting the time of expected discharge and volume. The volume discharged must not reduce the volume of the remaining wastewater to less than that necessary for full utilization of land application.

Discharge from a storage facility to a waterway will be acceptable only if (1) the storage facility has obtained an Iowa NPDES Operation Permit (2) the limitations listed in the Iowa NPDES Operation Permit are met and (3) land application has already been utilized to its maximum potential.

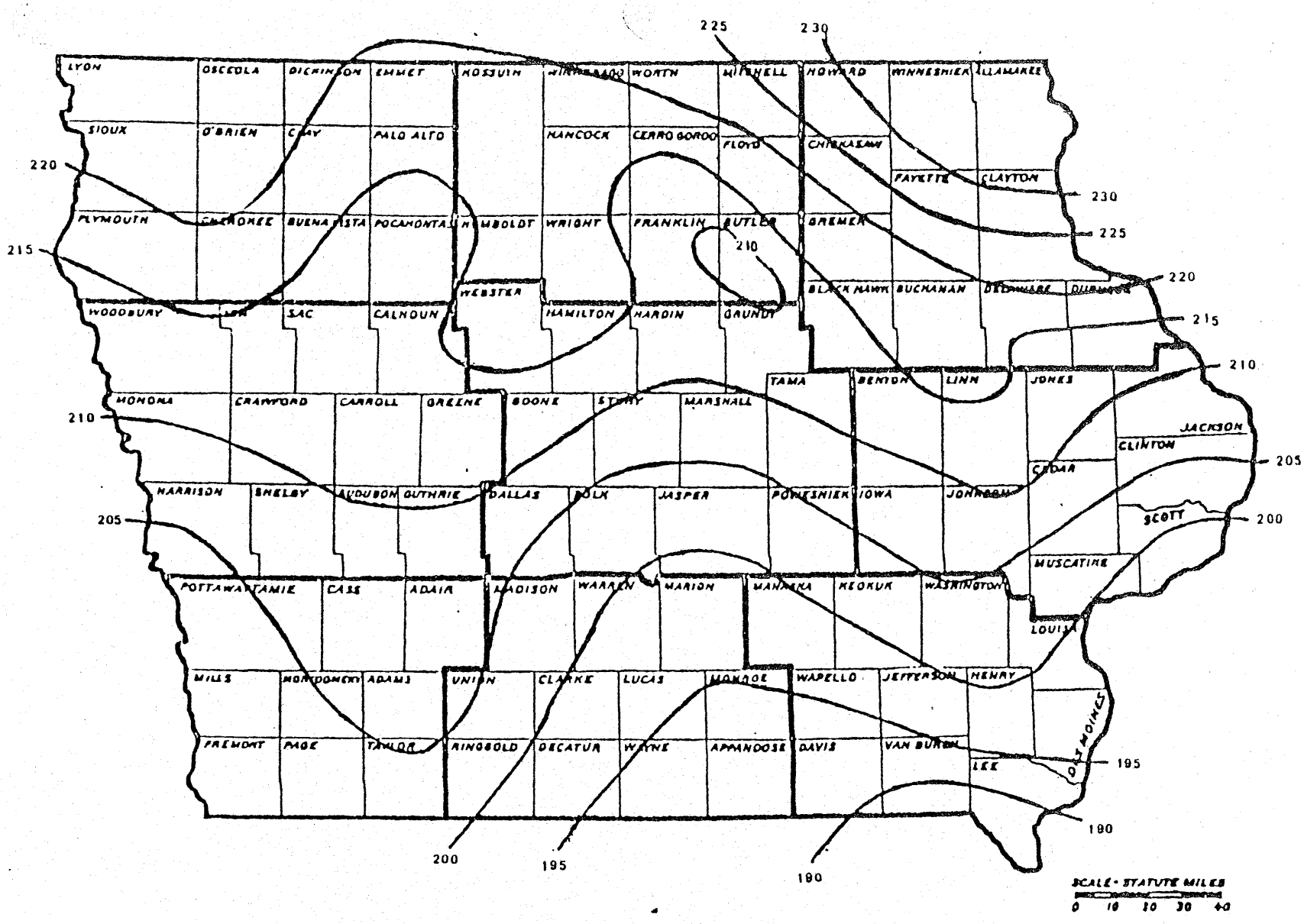

MINIMUM DAYS OF STORAGE
DUE TO CLIMATIC RESTRAINTS (21-E)

FIGURE 3

21.1.8 Reliability

21.1.8.1 General

The applicant shall submit a feasible alternative plan of wastewater treatment if and when the largest application area is out of service due to system breakdown.

21.1.8.2 Equipment

a. Any spray application equipment specified shall minimize the formation of aerosols.

b. A parts inventory for the application equipment shall be specified to expedite repair.

c. The system shall be designed to assure uniform distribution of wastewater over the application area.

d. Provisions should be made for draining the pipes to prevent freezing if pipes are located above the frost line.

21.1.8.3 Manpower

The applicant shall estimate the necessary manpower for proper operation, maintenance, and monitoring of the operation. Availability of such manpower should be established.

21.1.9 Monitoring Systems

21.1.9.1 Frequency

As a minimum, the reporting frequency shall be in accordance with the following:

a. Every three months for less than 0.5 mgd

b. Every two months for 0.5 - 2.0 mgd

c. Every month for greater than 2.0 mgd

21.1.9.2 Parameters

The parameters stated in 21.1.2.2 of these standards shall be monitored unless the applicant has demonstrated their insignificance in the influent wastewater. Additional parameters may require monitoring if found in significant concentration in the wastewater.

21.1.9.3 Location

a. Effluent; the location of monitoring shall be prior to site application.

b. Groundwater; the location of monitoring shall be adjacent to the site both up and down stream of the site in reference to the general groundwater flow direction.

21.1.9.4 Operational

a. Date of application.

b. Location of area and acreage used for the wee.

c. Precipitation, snow cover, and temperature on the day of application.

d. Volume of wastewater applied from pretreatment facility.

e. Volume of wastewater applied from storage facility.

f. Total volume of wastewater applied.

g. Duration of application for each cycle.

h. Type of crop grown.

i. Harvesting of crop (if used).

j. Ultimate use of the crop (if used).

21.1.10 Effluent and Groundwater Limitations.

21.1.10.1 Effluent

If discharged to a stream, monitoring of the recovered water from pumped withdrawal, underdrains, or collected runoff from overland flow shall be in accordance with the requirements listed in the Iowa NPDES Operation Permit.

21.1.10.2 Groundwater Limitations

The following requirements shall apply to all subsurface waters such as a ground water aquifer.

a. The groundwater resulting from the land application of wastewater after dilution with the affected native ground water shall meet this Department's standards for drinking water supplies as defined in 400-22 of the Iowa Administrative Code Section 22.3 (455B). If the existing concentration of a parameter in the native ground water exceeds the drinking water standards, there shall not be an increase in the concentration of the parameter due to land application of wastewater.

b. Any significant detrimental change in the groundwater at or near the site shall constitute grounds for requiring additional pretreatment and/or abandonment of the disposal site.

c. The applicant shall submit a feasible alternate plan of wastewater treatment if and when the contaminant levels of the ground water exceed the maximum allowable concentration.

21.2 SLOW RATE LAND APPLICATION

In a slow rate land treatment system, surface application includes ridge-and-furrow, border strip flooding and surface spraying. The applied wastewater is treated as it flows throught the soil matrix. A portion of the flow is taken up by the vegetation and the remaining flow percolates to the groundwater. Vegetation is a critical component for managing water and nutrients.

21.2.1 Site Criteria

In addition to the site criteria presented in 21.1.1.2, slow rate systems must also abide by the following:

a. The wetted disposal area shall be at least 1000 feet from any shallow public water supply well.

b. The wetted disposal area shall be at least 500 feet from any public lake or impoundment.

c. The wetted disposal area shall be at least 1/2 mile from any public lake or impoundment used as a source of raw water by a potable water supply.

21.2.2 Groundwater

21.2.2.1 Groundwater Table

The maximum anticipated elevation of the groundwater table shall be at least 5 feet below the surface within the disposal area.

The applicant must identify the following factors for all slow rate systems:

a. The extent of the recharge mound.

b. The need for underdrainage or pumped withdrawal.

c. The effects of the system on direction and rate of groundwater flow.

21.2.2.2 Underdrain

Where the site is to be underlain by field tile and the percolate is intercepted for discharge to surface waters, the minimum vertical distance between the surface of the irrigation field and the field tile shall be 3 feet.

21.2.3 Geology

Soils having permeability rates of 0.6 - 6.0 inches/hour are suitable for irrigation. Values below 0.2 inches/hour will generally require artificial drainage or overland flow approach.

The wetted disposal area shall have a soil mantle of at least 15 feet overlaying any rock, limestone or impermeable strata.

21.2.4 Topography

The maximum allowable slope of the wetted disposal area is 5%. When the site has slope in excess of 5%, a runoff control plan must be submitted to the local Soil Conservation District for approval. Soil conservation plans are developed with the assistance of a Soil Conservation Service conservationist.

21.2.5 Trace Element Limitations

Heavy metals and other toxic elements from the storage or treatment facility shall not exceed the maximum concentration found in the following table:

MAXIMUM CONCENTRATIONS OF TRACE ELEMENTS IN

APPLIED WASTEWATER (21-F)

Element	Limits mg/l
Aluminum	10.00
Arsenic	0.20
Beryllium	0.20
Boron	1.40
Cadmium	0.02
Chromium	0.20
Cobalt	0.10
Copper	0.40
Fluoride	1.80
Iron	10.00
Lead	10.00
Lithium	2.50
Manganese	0.40
Molybdenum	0.02
Nickel	0.40
Selenium	0.04
Vanadium	0.10
Zinc	4.00

21.2.6 Storage Requirements

The minimum amount of storage following pretreatment shall be determined from Figure 3. These days are considered minimum and should be increased by adding days required for crop planting, crop management, land management and crop harvesting.

21.2.7 Application Restrictions

21.2.7.1 Application Based on Permeability

The application rate should not exceed one half the design sustained permeability rate and in no case should be greater than 1 inch per hour.

21.2.7.2 Application Based on Limiting Factor

If nitrogen is the limiting factor in application, then the application of wastewater must stop upon harvest of the crop or the application must be reduced to assimilate the removal rate of the soil.

However, if the limiting factor affecting the application rate is water, the application of wastwater may continue until such a time that another limiting factor is reached, such as nitrogen or field capacity. The addition of wastewater after harvest must take into account the following year limitation. That is, if corn is planted this year and the limiting parameter is hydraulics and the nitrogen application is 20 pounds per acre less than the upper limit of crop uptake, then the nitrogen addition of 20 pounds per acre following harvest will be acceptable provided that some other limiting value is not exceeded.

21.2.7.3 Application During Frost and Runoff

Application of wastewater will not be allowed during periods of ground frost or during rainfalls.

21.2.7.4 Application to Public Use Areas

a. The public shall not be allowed into an area when spraying is being conducted.

b. Any drinking water fountains located on or near the application area must be protected from direct or wind blown reclaimed wastewater spray.

c. For golf courses utilizing wastewater, notice of its use shall be given on scorecards. Water hazards should have warning signs to warn against drinking of the water by the public. All piping and sprinklers associated with the distribution or transmission of wastewater shall be color coded and labeled or tagged to warn against the consumptive use of contents.

21.2.8 Resting or Drying Period

The application cycle, or the combination of application and resting periods, shall be defined in the form of an operating schedule. The length of the cycle and the ratio of wetting to drying depends on site-specific factors and may include seasonal variations.

21.2.9 Land Owner Agreements

Any party utilizing the slow rate irrigation method on an area owned by another party shall provide the Department with signed copies of documents establishing their legal rights to utilize the area for not less than five years. Such documents shall include provisions for option renewals specifying that at least one years notice is given to the party utilizing the area for disposal if the owner does not intend to renew the agreement. If the documents are not signed within 18 months following the selection of a land application system as the treatment facility, the Department may require that an alternative type of treatment be employed.

21.2.10 Water Rights

Any existing faciltiy with a permitted discharge which intends to irrigate any of its effluent must receive approval from the Iowa Natural Resource Council prior to issuance of an Operation Permit from this Department.

21.3 OVERLAND FLOW

Overland flow distribution is accomplished by applying wastewater uniformly over relatively impermeable sloped surfaces which are vegetated. Part of the flow percolates into the ground, a portion is lost to evapotranspiration while the remaining is collected and either discharged to a stream or reapplied on land.

21.3.1 Groundwater

The maximum ground water elevation shall be at least 2 feet below the application surface.

21.3.2 Geology

Soils having a percolation rate of greater than 0.2 inches/hr. will not be acceptable.

21.3.3 Topography

21.3.3.1 Slope

The land slope should be relatively uniform to prevent ponding and be in the range of 2 - 8%. If slopes greater than 8% exist, terracing shall be provided. For all overland flow systems, the slope must be as nearly equal to a plane surface as possible and sloped in such a way as to prevent short-circuiting of the wastewater. No swales, depressions, or gullies are permitted.

21.3.3.2 Length of Travel

300 feet is the maximum length over which distribution of wastewater can be maintained.

21.3.4 Storage Requirements

The minimum amount of storage following pretreatment shall be determined from Figure 3. The applicant shall increase the storage facility to accommodate rainfall on the application site. The above storage is then to be increased to accommodate any recirculation needed to comply with the limitations in the Iowa NPDES Operation Permit.

21.3.5 Overland Flow Facility Design

21.3.5.1 Hydraulic Loading

The maximum hydraulic application rate is 3 inches/week. The distribution system shall be designed to permit application on each field for 6 to 8 hours/day. Optimum wetting to drying cycle should range from a maximum of 6 to 8 hours on and a minimum of 16 to 18 hours off.

21.3.5.2 Nitrogen Loading

For overland flow systems, the denitrification of 20% of the applied nitrogen may be conservative. To utilize a value greater than 20%, the applicant must either have documentation from an agronomist and soil specialist, or run a pilot plant to verify a greater denitrification value. If a value greater than 20% is verified, the applicant must submit data which will specify the percent denitrification expected for the various temperatures in which the system will be operated.

21.3.5.3 Distribution System

a. General

The system must be valved and manifolded to permit a portion of each application area to be taken out of service for grass mowing and/or harvesting.

b. Sprinklers

Sprinklers shall be placed downslope from the highest point on the application area at a distance equal to the radius of the sprinkler, unless one-half circle sprinklers are used.

c. Surface Distribution

For surface distribution methods such as gated pipe or bubbling orifice, gravel may be necessary to dissipate energy and insure uniform distribution of water.

21.3.5.4 Vegetation

a. Crop Cover

Grasses must be selected for their resistance to continuously wet root conditions. Also, their growth should not be in clumps as this will result in the formation of rivulets of flow rather than a uniform sheet flow. Common grasses for this purpose have been reed canary grass, Italian rye, red top, tall fescue, and Bermuda grass. Application is not allowed until a full grass cover has been established.

b. Crop Removal

Vegetation harvest and removal is required. The vegetation must be cut just prior to maturity (every 4 to 6 weeks) and physically removed from the site.

21.3.5.5 Access

Site access requires special equipment with broad tires having low pressure (less than 10 $lb/in.^2$) to avoid creating ruts that would short-circuit the flow.

21.3.5.6 Collection Ditches

A network of ditches must be constructed to intercept the runoff and channel it to the point of discharge or storage. They must be graded to prevent erosion, yet, at the same time, they must have sufficient slope to prevent ponding in low spots. The collection system must be designed to accept the added flow from rainfall runoff.

If the collection ditch discharges to a stream, the effluent must meet the limitations and monitoring required in the Iowa NPDES Operation Permit. If the collected water cannot comply with the permit limitations it will be required that the flow be either returned to the top of the application area for additional treatment or transmitted to storage.

REFERENCES

21-A. Developed by cooperative efforts of Regional Research Projects NC-118 and W-124 and ARS, USDA and cited in Aserhoff, B., S.A. Schroeder, and P.S. Brackman. Salmonellesis in the United States, - A Five Year Review. American Journal of Epidemiology 92:13-24.1970.

21-B. Richards L.A., Diagnosis and Improvement of Saline and Alkali Soils. Agricultural Handbook No. 60, U.S. Government Printing Office, 1954.

21-C. "A Guide to Planning and Designing Effluent Irrigation Disposal Systems in Missouri". Published by the University of Missouri Extension Division. MP 337 3/73/1250.

21-D. Miller, W.M., "Irrigation Water Quality Crop Tolerances," Agricultural Engineering Fact Sheet SW11, University of Wyoming, Laramie, Wyoming, July, 1956.

21-E. Waite, P.J., "Freeze Hazards in Iowa", Weather and Field Crops from Planting to Harvest, Iowa Crop and Livestock Reporting Service, Iowa Department of Agriculture - U.S. Department of Agriculture, 1973.

21-F Suggested Maximum Applications of Trace Elements to Soils Without Further Investigation. 5-10, EPA 625/1-77-08, Process Design Manual for Land Application of Municipal Wastewater.