Adopted April 25, 1979
Amended May 20, 1986
Amended May 20, 1987

IOWA WASTEWATER FACILITIES DESIGN STANDARDS

CHAPTER 18C

WASTEWATER TREATMENT PONDS (LAGOONS)

18C.1 GENERAL

- 18C.1.1 Applicability
- 18C.1.2 Variances
- 18C.1.3 Explanation of Terms
- 18C.1.4. Scope of Standard

18C.2 SUPPLEMENT TO ENGINEER'S REPORT

- 18C.2.1 Area Development
- 18C.2.2 Area Planning
- 18C.2.3 Site Description
- 18C.2.4 Field Tile
- 18C.2.5 Soils Testing
- 18C.2.6 Water Supply Characteristics

18C.3 LOCATION

- 18C.3.1 Site Inspection
- 18C.3.2 Future Expansion
- 18C.3.3 Prevailing Winds
- 18C.3.4 Surface Runoff
- 18C.3.5 Hydrology
  - 18C.3.5.1 Horizontal Separation
  - 18C.3.5.2 Vertical Separation
  - 18C.3.5.3 Perched Groundwater

18C.3.6 Geology

18C.3.6.1 Karst Features

18C.3.6.2 Bedrock Separation

18C.3.7 Flooding Protection

18C.4 DESIGN LOADINGS

18C.4.1 Hydraulic

18C.4.1.1 Controlled Discharge Ponds

18C.4.1.2 Aerated Ponds

18C.4.1.3 Other Waste Sources

18C.4.2 Organic

18C.4.3 Industrial Wastes

18C.5 CONTROLLED DISCHARGE POND DESIGN

18C.5.1 Number of Cells

18C.5.1.1 Two Cells

18C.5.1.2 Three Cells

18C.5.2 Organic Loading

18C.5.2.1 Two Cells

18C.5.2.2 Three or More Cells

18C.5.3 Hydraulic Storage

18C.5.3.1 Entire System

18C.5.3.2 Secondary Cells

18C.5.3.3 Greater Times

18C.5.4 Liquid Depths

18C.5.4.1 Primary Cells

18C.5.4.2 Secondary Cells

18C.5.5 Piping Arrangement

18C.5.5.1 Reliability

18C.5.5.2 Cell Isolation

18C.5.5.3 Influent

18C.5.5.4 Effluent

18C.5.6 Control Structures

18C.5.6.1 Influent Structure

18C.5.6.2 Inter-Cell Structure

18C.5.6.3 Effluent Structure

18C.6 AERATED FACULTATIVE POND DESIGN

18C.6.1 Sizing of Aerated Facultative Ponds

18C.6.1.1 Detention Time for Typical Waste

18C.6.1.2 Detention Time for Greater Strength Waste

18C.6.1.3 Temperatures

18C.6.1.4 Reaction Rate Conversion

18C.6.1.5 K-Factor Determination

18C.6.2 System Reliability and Piping

18C.6.3 Cell Depths

18C.6.4 Aeration Equipment

18C.6.4.1 General

18C.6.4.2 Diffused Aeration

18C.6.4.3 Tube Diffuser Systems

18C.6.4.4 Other Diffused Air Systems

18C.6.4.5 Platform Mounted Surface Aerators

18C.6.4.6 Floating Surface Aerators

18C.6.5 Modifications to Existing Lagoons

18C.7 POND CONSTRUCTION DETAILS

18C.7.1 Pond Shape

18C.7.1.1 General

18C.7.1.2 Controlled Discharge Ponds

18C.7.1.3 Aerated Facultative Ponds

18C.7.2 Embankments and Dikes

18C.7.2.1 Material

18C.7.2.2 Top Width

18C.7.2.3 Maximum Slopes

18C.7.2.4 Minimum Slopes

18C.7.2.5 Freeboard

18C.7.2.6 Design Depth

18C.7.2.7 Erosion Control

18C.7.2.8 Additional Erosion Protection

18C.7.2.9 Seeding

18C.7.3 Pond Bottom

18C.7.3.1 Soil

18C.7.3.2 Seal

18C.7.3.3 Over-Excavation

18C.7.3.4 Uniformity

18C.7.4 Influent Lines

18C.7.4.1 Material

18C.7.4.2 Influent Structure

18C.7.4.3 Flow Distribution

18C.7.4.4 Location

18C.7.4.5 Point of Discharge

18C.7.4.6 Influent Discharge Apron

18C.7.5 Control Structure

18C.7.6 Pond Piping

18C.7.6.1 Material

18C.7.6.2 Hydraulic Capacity

18C.7.6.3 Interconnecting Piping

18C.7.6.4 Controlled Discharge Drawdown Structure Piping

18C.7.6.5 Aerated Facultative Pond Discharge Structure Piping

18C.7.7 Prefilling

18C.7.8 Cell Dewatering

18C.8 FLOW MEASUREMENT

18C.8.1 Influent

18C.8.2 Effluent

18C.8.3 Small Facilities

18C.8.4 Equipment Protection

18C.8.5 Structures

18C.9 DISINFECTION

18C.9.1 Application

18C.9.2 Location

18C.10 MISCELLANEOUS

18C.10.1 Fencing

18C.10.2 Access

18C.10.3 Warning Signs

18C.10.4 Groundwater Monitoring

18C.10.5 Laboratory Equipment

18C.10.6 Pond Level Gauges

18C.10.7 Service Building

APPENDIX

18C-A	Derivation of Reaction Formula
18C-B	Lagoon Flow Schematics for Piping and Reliability
18C-C	Typical 2-Cell Lagoon Layout
18C-D	Typical 3-Cell Lagoon Layout
18C-E	Typical 4-Cell Lagoon Layout

IOWA WASTEWATER FACILITIES DESIGN STANDARDS

CHAPTER 18C

WASTEWATER TREATMENT PONDS (LAGOONS)

18C.1 GENERAL

18C.1.1 Applicability

This chapter is applicable to construction, installation or modification of any lagoon type disposal system required to obtain a construction permit from this Department under the Iowa Code, Section 455B.45, and 900--64.2, of the Iowa Administrative Code (I.A.C.).

18C.1.2 Variances [900--64.2(9)"c", "d" and "e", IAC]

c. Variances from the design standards and siting criteria which provide in the judgment of the department for substantially equivalent or improved effectiveness may be requested when there are unique circumstances not found in most projects. The executive director may issue variances when circumstances are appropriate. The denial of a variance may be appealed to the commission.

d. When reviewing the variance request, the executive director may consider the unique circumstances of the project, direct or indirect environmental impacts, the durability and reliability of the alternative, and the purpose and intent of the rule or standard in question.

e. Circumstances that would warrant consideration of a variance (which provides for substantially equivalent or improved effectiveness) may include the following:

(1) The utilization of new equipment or new process technology that is not explicitly covered by the current design standards.

(2) The application of established and accepted technologies in an innovative manner not covered by current standards.

(3) It is reasonably clear that the conditions and circumstances which were considered in the adoption of the rule or standard are not applicable for the project in question and therefore the effective purpose of the rule will not be compromised if a variance is granted.

Where existing ponds are being utilized in the upgrading of wastewater treatment facilities, or where unusual conditions may exist, this Department may vary from these design criteria provided that adequate engineering justification is submitted which substantially demonstrates that variations will result

in either 1) at least equivalent effectiveness while significantly reducing costs, or 2) improved effectiveness.

18C.1.3 Explanation of Terms

The terms "shall" or "must" are used in these standards when it is required that the standard be used. Other terms such as "should" and "recommend" indicate desirable procedures or methods which should be considered but will not be required.

18C.1.4 Scope of Standard

These design criteria deal specifically with the design of earthen wastewater treatment pond (lagoon) systems. The main emphasis is placed on wastewater treatment pond systems which will serve as the sole wastewater treatment system for domestic type wastewater. The use of wastewater treatment ponds as supplementary treatment in combination with other treatment systems shall require evaluation on a case-by-case basis.

Wastewater treatment pond systems shall be considered as those systems designed to achieve secondary treatment effluent limitations by reducing the 5-day biochemical oxygen demand (BOD_5) without maintaining all biological solids in suspension. Systems considered shall be the 180 day, controlled discharge pond and the flow-through aerated facultative pond systems. Flow-through photosynthetic pond systems shall not be considered as a viable treatment alternative for achieving secondary effluent limitations.

The term "pond" is used in these design criteria to include the total earthen treatment facility and the term "cell" is used to designate the individual units of the total facility.

18C.2 SUPPLEMENT TO ENGINEER'S REPORT

The engineer's report shall contain pertinent information on location, geology, soil conditions, area for expansion and any other factors that will affect the feasibility and acceptability of the proposed project. The following information must be submitted in addition to that required in Chapter 11 of the Design Standards.

18C.2.1 Area Development

The location of all residences, commercial developments, parks, recreational areas and water supplies, including a log of each well (if available) within one-quarter mile of the proposed pond shall be included in the engineer's report. If a well log is not available, or is incomplete, all available details of construction such as well and casing depths, casing material, pumping rate, static and pumping water levels, etc. shall be provided.

18C.2.2. Area Planning

Any applicable land use zoning adjacent to the proposed pond site shall be included. The project shall conform with local and regional planning. Clearance from the appropriate planning agencies shall be included with the engineer's report when required (such as for grant funded projects).

18C.2.3 Site Description

A description, including maps showing elevations and contours of the site and adjacent area shall be provided. Due consideration shall be given to additional treatment units and increased waste loadings in determining land requirements. Current U.S. Geological Survey and Soil Conservation Service Maps may be considered adequate for preliminary evaluation of the proposed site.

18C.2.4 Field Tile

The location, depth and discharge point(s) of any field tile in the immediate area of the proposed site shall be identified.

18C.2.5 Soils Testing

Data from soil borings conducted by a qualified organization normally engaged in soil testing activities to determine subsurface soil characteristics and groundwater characteristics (including elevation and flow) of the proposed site and a discussion of their effect on construction and operation of the pond shall be submitted. The number and location of the soil borings will vary on a case-by-case basis as determined by the designing engineer, and accepted by this Department. The following are minimum requirements:

a. A minimum number of three borings will be required for ponds 0.5 acres or less, and four or more for ponds larger than 0.5 acres. One additional boring per acre is recommended for ponds larger than four acres where borings show inconsistent soils.

b. Location emphasis shall be placed at points of deepest excavation; however, a true cross sectional indication of substrata characteristics for the entire site must be provided.

c. All borings should be taken to a minimum depth of ten feet below the bottom elevation of the pond.

d. At least one boring shall be taken to a depth of 25 feet below the bottom elevation of the pond or into bedrock, whichever is shallower. If the boring of 25 feet encoun-

ters a water bearing strata, each of the required borings shall also extend to the water bearing strata, with a maximum depth of 25 feet.

For sites where bedrock is encountered, samples at five foot intervals from one appropriate boring are to be submitted along with boring logs, boring locations and the soils report on the site. All borings are to be backfilled with excavated material except that those borings encountering sand, gravel or a water bearing strata shall be backfilled with a mixture of natural soil and bentonite.

e. Sufficient soil borings shall be taken at borrow pit areas to establish the consistency and nature of the material as it relates to the use of this borrow material within the lagoon construction. The depths of the borings are optional, but they should be at least one foot below the lowest borrow layer.

f. The selection of a soil sealant, as well as the amount required to meet percolation standards shall be determined prior to construction by laboratory permeameter testing. Such testing shall be done by the consulting engineering firm or by an independent soil testing laboratory. Results provided by a sealant supplier laboratory are not acceptable.

A procedure should be used that is similar to that submitted by C.L. Sawyer of the Bureau of Public Roads and found on pages 141-145 of ASTM's Fifth Edition of Special Procedures for Testing Soil and Rock for Engineering Purposes (ASTM's STP479, published in 1970). Also acceptable are similar methods which deal with the evaluation of relatively tight systems using falling-head permeameters.

Testing of the seal subsequent to construction shall be done in accordance with Section 18C.7.3.2.

18C.2.6 Water Supply Characteristics

Sulfate content of the basic water supply shall be determined.

18C.3 LOCATION

18C.3.1 Site Inspection

Proposed wastewater treatment pond sites must be inspected as required by 900--64.2(2) and meet the separation distances under 900--64.2(3) of the Iowa Administrative Code. The procedure and minimum information required under 900--60.4(1)"c" of the Iowa Administrative Code must be complied with before a site survey will be conducted.

18C.3.2 Future Expansion

Consideration should be given in the selection of the pond site to the possibility of expansion or addition of future treatments units as may be necessary to meet applicable discharge standards.

18C.3.3 Prevailing Winds

If practical, the pond should be located so that prevailing winds will be in the direction of uninhabited areas.

18C.3.4 Surface Runoff

Provisions shall be made to divert all stormwater area runoff from entering the pond, thus protecting the pond from excessive hydraulic loadings, inner-embankment erosion, and siltation.

Storm sewers or other conveyances for storm water shall not be located under lagoon cells. Storm sewers may be placed within the dike itself if the following conditions are met:

a. The flow line (invert) of the storm sewer is not more than three feet (3') below the high water level in the adjacent lagoon cells,

b. The horizontal distance from the centerline of the storm sewer to the adjacent lagoon cell water surface is at least eight feet (8'), and

c. The storm sewer is centered in the dike in such a manner that excavation of the storm sewer could be accomplished without disturbing the inner side or sides (sloped embankments) of the dike.

Erosion protection shall be provided for all external stormwater ditches as needed to prevent erosion of the outer pond embankments.

18C.3.5 Hydrology

18C.3.5.1 Horizontal Separation

Construction of the pond in close proximity to water supplies and other facilities vulnerable to contamination should be avoided, but in no case shall the separation distances be less than the minimum requirements of subrule 900--64.2(3) of the Iowa Administrative Code.

18C.3.5.2 Vertical Separation

A minimum separation of four feet between the pond seal and the maximum groundwater table is recommended; however, in no case shall the top of the pond seal be below the maximum groundwater table. Where the groundwater table occurs as a result of a perched groundwater condition, see Section 18C.3.5.3.

If the maximum anticipated groundwater table is less than two feet below the bottom of the lagoon, the lagoon shall be provided with a synthetic liner.

18C.3.5.3 Perched Groundwater

Provisions for the permanent artificial lowering of perched groundwater layers on a site may be considered. Perched groundwater layers shall be considered as those distinct layers of groundwater of limited area caused by the blockage of normal seepage of rainwater/snowmelt/runoff by an impervious soil layer. Detailed Justification shall be provided to confirm that the groundwater layers are of limited area and to confirm the adequacy of the proposed drainage around the pond system.

Minimum requirements shall include the permanent lowering of the perched groundwater table to an elevation one foot below the top of the pond seal. If the perched groundwater table after permanent lowering is less than two feet below the bottom of the lagoon, the lagoon shall be provided with a synthetic liner.

18C.3.6 Geology

18C.3.6.1 Karst Features

The pond shall not be located on sites that exhibit Karst features; i.e., sink holes or solution channeling generally occurring in areas underlain by limestone or dolomite.

All proposed lagoon facilities in Karst areas will require special review early in the siting procedure. Proposed locations shall be submitted for review and if it is determined that a potential for sinkhole development exists, a lagoon system will not be permitted.

If the facility is located in an area of known or suspected fractured limestone (Karst topography) all cells must be lined with a synthetic liner.

18C.3.6.2 Bedrock Separation

A separation of ten feet between the pond bottom and any bedrock formations is recommended with a minimum separation of four feet required. A synthetic liner shall be required if the lagoon bottom is to be located less than ten feet above a carbonate or sandstone formation.

18C.3.7 Flooding Protection

The top of the pond embankments shall be constructed at least one foot above the elevation of the 100-year flood. Other flood protection requirements shall be in accordance with Section 14.2.4 of these standards.

18C.4 DESIGN LOADINGS

18C.4.1 Hydraulic

18C.4.1.1 Controlled Discharge Ponds

The hydraulic design of controlled discharge ponds shall be based upon the average flow for the wettest 180 consecutive days of record (AWW-180 flow).

The design flow may be adjusted to account for infiltation and inflow which is eliminated by sewer system rehabilitation.

18C.4.1.2 Aerated Ponds

a. For municipal wastes, the hydraulic flows used to determine cell sizes in accordance with Section 18C.6.1 shall be based upon the ADW flow plus 30% of the 30-day average wet weather (AWW-30) flow in excess of the ADW flow, or 100 gpcd, whichever is greater. The design flow may be adjusted to account for infiltation and inflow which is eliminated by sewer system rehabilitation.

b. For industrial and commercial wastes, the hydraulic flows used to determine cell sizes in accordance with Section 18C.6.1 shall be based upon the average daily flow for the maximum 15-day period. This value may be reduced up to 10% if the average daily flow for the maximum 30-day period is less than 70% of the 15-day value.

18C.4.1.3 Other Waste Sources

The hydraulic flows used to determine cell sizes in accordance with Sections 18C.5.3 and 18C.6.1 for low volume waste sources such as parks, camps, schools, campgrounds or similar facilities can be based on published values for liquid waste generation from that type of facility.

The design flows for new municipal systems shall be in accordance with Section 14.4.5.3.

18C.4.2 Organic

The organic design of ponds shall be in accordance with Section 14.4.6.

18C.4.3 Industrial Wastes

The requirements for industrial wastes shall be in accordance with Sections 14.4.5.4, 14.4.6.2 and 18A.4.

18C.5 CONTROLLED DISCHARGE POND DESIGN

18C.5.1 Number of Cells

18C.5.1.1 Two Cells

A minimum of two cells are required for those small installations in which less than one acre total surface area is required. Two cell systems shall consist of one primary and one secondary cell. The primary cell should contain approximately two-thirds of the total water surface area.

18C.5.1.2 Three Cells

A minimum of three cells are required for all facilities greater than one acre total surface area. Systems consisting of three or more cells shall have a minimum of two secondary cells and one or more primary cells.

18C.5.2 Organic Loading

18C.5.2.1 Two Cells

The maximum organic loading on the primary cell of a two cell controlled discharge pond (based upon the water surface area of the primary cell at the maximum pond water depth) shall not exceed 20 pounds BOD_5/acre/day.

18C.5.2.2 Three or More Cells

The maximum organic loading on the primary cell(s) of a three or more cell controlled discharge pond system shall be based upon the total water surface area of the primary cell(s) at the maximum pond water depth and shall not exceed 25 pounds BOD_5/acre/day.

18C.5.3 Hydraulic Storage

18C.5.3.1 Entire System

Controlled discharge pond systems shall provide a minimum hydraulic storage time of 180 days based upon the wettest 180 consecutive days of record.

Storage shall be computed as the total volume provided in the entire system between the two foot depth level and the maximum water surface level. The volume below the two foot level shall not be considered when computing storage time.

$$\text{Storage} = \frac{\text{volume above 2' level (gallons)}}{\text{*Q (gallons/day)}} \geq 180 \text{ days}$$

*Q = average daily design flow based upon the wettest 180 consecutive days of record. The design flow may be adjusted to account for infiltration and inflow which is eliminated by sewer system rehabilitation.

18C.5.3.2 Secondary Cells

The secondary cells of a controlled discharge pond having three or more cells shall provide a minimum storage of thirty (30) days each. The secondary cell of a two cell system shall provide a minimum storage of sixty (60) days.

18C.5.3.3 Greater Times

Hydraulic storage times of greater than 180 days may be required for instances where a longer storage period is required to maintain the quality of the receiving stream.

18C.5.4 Liquid Depths

18C.5.4.1 Primary Cells

The liquid depth of primary cell(s) shall not exceed a total of six feet.

18C.5.4.2 Secondary Cells

The liquid depth of secondary cell(s) shall not exceed a total of eight feet.

18C.5.5 Piping Arrangement

18C.5.5.1 Reliability

The pond cells and piping shall be designed such that reliability and flexibility of operation are provided.

18C.5.5.2 Cell Isolation

Reliability for controlled discharge pond systems shall imply that piping and control structures are provided to allow the system to remain in operation with any one cell out of service. Individual influent lines shall be provided in accordance with Section 18C.7.4 to allow for primary cell isolation; and multi-level cell drawdown lines shall be provided in accordance with Section 18C.7.6.4 to allow for secondary cell isolation and controlled discharge and selective drawdown of such cells. The piping for secondary cells of a three cell system shall be arranged so that transfer of wastewater from the primary cell to one of the secondary cells can occur simultaneously with discharge to the receiving stream from the other secondary cell.

18C.5.5.3 Influent

In a three cell system the piping shall be arranged such that raw influent can be diverted to only one of the secondary cells.

18C.5.5.4 Effluent

The piping shall be arranged such that effluent from any primary cell cannot be discharged directly to the receiving stream.

18C.5.6 Control Structures

A minimum of three control structures shall be provided to allow for system operation and operator accessibility:

18C.5.6.1 Influent Structure

The influent control structure shall be located prior to the system to allow for diversion of the raw influent into a minimum of two cells, thus allowing for primary cell isolation.

18C.5.6.2 Inter-Cell Structure

An inter-cell control structure shall allow multi-level drawoff from the primary cell(s) and flow diversion to any secondary cell.

18C.5.6.3 Effluent Structure

The effluent control structure shall provide for multi-level drawdown of any secondary cell and discharge to the receiving stream.

18C.6 AERATED FACULTATIVE POND DESIGN

18C.6.1 Sizing of Aerated Facultative Ponds

18C.6.1.1 Detention Time for Typical Waste

As a minimum, aerated facultative pond systems designed to treat a typical domestic waste ($BOD_5 \leq$ 200 mg/l) shall consist of two or more aerated cells and one quiescent cell or zone which provide the following minimum hydraulic detention times:

MINIMUM DETENTION TIMES FOR AERATED LAGOON CELLS FOR TYPICAL DOMESTIC WASTE (BOD $\leq$ 200 mg/l)

*No. of Aerated Cells	**Days for Treatment	Quiescent Cell, Days	Total Detention Time, Days
2	29	2	31
3	24	2	26
4	23	2	25

* The first two cells shall be of equal size and no one cell shall provide more than 50% of the total required volume.

** Includes five days detention time for ice cover and sludge accumulation. Ice cover represents 10% of the original treatment volume in the above table, but shall be calculated on the basis of an average ice thickness of 12". Sludge volume is based upon 1.54 days of detention time per 100 mg/l of suspended solids in the influent for a 20-year accumulation of sludge.

18C.6.1.2 Detention Time for Greater Strength Waste

The design minimum detention times of aerated cells treating domestic type waste of greater strength than 200 mg/l BOD_5 should be determined utilizing the following equation on a per-cell basis.

$$t = \frac{E}{2.3K_1 \times (100 - E)}$$

t = detention time, in each aerated cell, days

E = percent of BOD_5 to be removed in the aerated cell

K_1 = reaction coefficient, per day, base 10. For normal domestic sewage the K_1 value may be 0.12/day for T = 20°C and 0.06/day for T = 1°C.

See Appendix 18C-A for derivation of reaction formula.

Aerated facultative pond systems designed to treat greater strength waste with a BOD_5 of 400 mg/l or more shall consist of three or more aerated cells and one quiescent cell or zone. The first two cells shall be of equal size and no one cell shall provide more than 50% of the total required volume.

The following minimum detention times are presented for illustration and result from use of the above formula with provision of additional volume for sludge accumulation and ice cover.

MINIMUM DETENTION TIMES
FOR AERATED LAGOON CELLS
FOR GREATER STRENGTH WASTE

Influent BOD mg/l	No. of Aerated Cells	*Days for Treatment	Quiescent Cell, Days	Total Detention Time, Days
400	3	40	2	42
400	4	35	2	37
400	5	34	2	36
1000	3	70	2	72
1000	4	61	2	63
1000	5	56	2	58
1000	6	54	2	56

* Includes nine days detention for ice cover and sludge accumulation at 400 mg/l and 19-20 days detention for ice cover and sludge accumulation at 1000 mg/l. Suspended solids assumed at 400 and 1000 mg/l.

Ice cover represents 10% of the original treatment volume in the above table, but shall be calculated on the basis of an average ice thickness of 12".

The days for sludge accumulation should be adjusted for actual conditions if the suspended solids concentrations differ appreciably from the assumed values given.

Required volume for sludge accumulation for 20 years may be computed on the basis of 1.54 days of volume required per 100 mg/l of suspended solids in the influent flow.

18C.6.1.3 Temperatures

For the determination of the minimum detention time required in the aerated cells, 1°C shall be considered the maximum design temperature for domestic type wastes. 20°C shall be used in determining the oxygen requirements of the system unless the wastes will be at a higher temperature.

18C.6.1.4 Reaction Rate Conversion

Conversion of the reaction rate coefficient to temperatures other than 20°C shall be according to the following formula:

$K_1 = K_{20}\,\theta^{(T-20)}$
T = Reactor temperature in °C
θ = Temperature correction factor

18C.6.1.5 K-Factor Determination

The vaulues for K and θ shall be determined experimentally for aerated pond systems which will be subjected to industrial waste that will have a substantial impact upon the treatment system, septic waste, partially treated waste, or other nondomestic strength waste. Conversion of the reaction rate coefficient to the appropriate temperature value shall be based upon experimental data using one of the following methods.

a. BOD Bottle Simulation Experimental Technique

BOD bottle simulation may be used to simulate the BOD removal rate "K". When this technique is applied, at least four composite samples must be obtained on days representative of the design condition. To verify results, each of these four samples should be split and a BOD bottle simulation test conducted for each. Samples should be incubated at critical operating temperatures, and a series of tests run over a 10 to 20 day period. The "K" rate at critical low temperature sets the detention

time in the pond. The "K" rate at critical high temperature sets the maximum required oxygen supply rate. The data can be used to determine the "K" rate by use of the Thomas method or the least squares method.

b. Bench Scale K-Factor Determination

It is suggested that at least four reactors with detention times from 2 - 20 days be used. Reactors should be set up and flow rates established to achieve the desired detention time. Continuous aeration should be provided.

COD tests should be made daily. When effluent values have stabilized, the influent and effluent BOD's and COD's will indicate the K rate that applies. The source of feed to each reactor should be the same and should be at a continuous rate. The dissolved oxygen and mixing power level in the reactor should approximate that of the aerated pond.

The temperature correction factor may be established by lowering the reactor temperature or by using the BOD bottle simulation technique.

c. Other Experimental Techniques

The designer may choose to use another experimental technique for "K" and θ factor determination. It is recommended that a description of the experimental technique and program be submitted to the Department for approval prior to initiating the testing program.

18C.6.2 System Reliability and Piping

The pond cells and piping shall be designed such that reliability and flexibility of operation are provided. All systems shall be designed with piping flexibilities to permit isolation of any cell without affecting the transfer and discharge capabilities of the total system. In addition, the ability to discharge the influent waste load to a minimum of two cells and to all primary cells in the system shall be provided. Raw influent shall not be diverted to the quiescent cell or zone. When disinfection is required, cell isolation shall not result in bypassing of the disinfection facilities.

18C.6.3 Cell Depths

The depth of cells should be in the range of 10-15 feet and shall be at least five feet.

18C.6.4 Aeration Equipment

18C.6.4.1 General

Adequate mixing to provide oxygen dispersion shall be provided.

Oxygen requirements will generally depend upon the BOD loading, degree of treatment required, temperature, and if applicable, the concentration of suspended solids to be maintained. Aeration equipment shall be capable of supplying a minimum of 2 lbs. O_2/lb. of BOD_5 applied, and maintaining an average dissolved oxygen level of 2 mg/l or greater in the cells at all times.

Suitable protection from the elements shall be provided for electrical controls, aerators and piping.

a. Manufacturer's data shall be submitted to verify mixing zone and oxygen dispersion capabilities of the aerators to be used.

b. Reliability in diffused air systems, to include bottom diffusers and jet aeration, shall be provided in accordance with the following:

   The blowers shall be provided in multiple units, so arranged and in such capacities as to meet the maximum air demand with the single largest unit out of service.

   The air diffusion system for each aeration cell shall be designed such that the largest section of diffusers can be isolated without losing more than 50 percent of the oxygen transfer capability within each cell.

c. Reliability in mechanical aeration systems, to include surface aerators (floating and fixed) shall be provided in accordance with the following:

   There shall be a sufficient number of aerators to enable the design oxygen transfer of a particular cell to be maintained with the largest capacity aerator in that cell out of service. It is permissible for the backup aerator to be a complete uninstalled unit or a motor and prop assembly (drive train) provided that the

installed aerator or parts can be easily removed and replaced. However, at least two aerators shall be installed in each primary cell.

d. Exceptions of Duplication Requirements

The preceding shall be considered minimum, and more stringent duplication may be required if the situation so warrants. The only exception to this may be in the upgrading of an existing plant which contains one unit large enough to provide at least 100 percent of the total design loading capacity to that unit operation. In this situation, a case-by-case determination of requirements for duplication will be made by this Department.

18C.6.4.2 Diffused Aeration

a. The specified capacity of blowers or air compressors should take into account the possibility that the air intake temperature may reach 104°F (40°C) or higher and also that the barometric pressure may be less than normal.

The specified capacity of the motor drive should also take into account that the intake air temperature may be as low as -22°F (-30°C) or lower, which may require oversizing of the motor or a means of reducing the rate of air delivery so as to prevent overheating and damage to the motor.

b. The blowers shall be provided in multiple units, so arranged and in such capacity as to meet the maximum air demand with the single largest unit out of service. The design should consider varying the volume of air delivered in proportion to the demand resulting from differing loads on the ponds. Blower design shall consider the potential for future loads which may require a greater oxygen supply.

c. The spacing of the diffusers should be in accordance with the oxygenation requirements throughout the length of each pond. The problem of ice cover affecting air distribution during winter operation should be considered in the design of the air diffuser system and selection of the blowers.

d. Individual control valves shall be provided at each junction in the aeration matrix, preferably with indicator markings for throttling or

for complete shut off. Diffusers and piping in any single assembly shall be designed to have substantially uniform pressure loss.

e. Air filters shall be provided in numbers, arrangements, and capacities to furnish at all times an air supply sufficiently free from dust to prevent clogging of the diffuser system. The location of air filters shall be easily accessible for maintenance purposes.

f. Blower unit locations shall be carefully chosen to reduce noise levels in adjacent working areas.

18C.6.4.3 Tube Diffuser Systems

a. The diffuser lines (tubes) shall extend across the pond with sufficient slack allowed for raising and cleaning. The air headers shall be protected from freezing.

b. To prevent clogging of the air lines, provisions shall be made to accommodate frequent cleaning. Hydrogen chloride gas ports and adequate hydrogen chloride gas cleaning equipment shall be provided for this purpose.

18C.6.4.4 Other Diffused Air Systems

a. The air supply lines shall be properly anchored with corrosion resistant anchors capable of withstanding two times the bouyant force of the lines and be protected against temperature expansion and contraction.

b. Diffusers or equipment subject to clogging should be designed to be easily removed or cleaned without completely draining the pond.

c. The top of the diffusers (flat plate, vertical tube or other) shall terminate below the elevation of maximum anticipated ice thickness to avoid winter freezing problems. The air headers shall be protected from freezing.

18C.6.4.5 Platform Mounted Surface Aerators

a. Mechanisms shall be protected from freezing. Consideration should be given to the installation of splash plates for controlling misting.

b. Platform legs shall be spaced at a sufficient distance from the aerator to minimize the effect of ice build-up caused by splashing.

c. The designer should consider varying the amount of oxygen transfered in proportion to the demand represented by the load on the pond. (For example, time clock aerator operation or water level flexibility.)

d. Sufficient standby power shall be provided to prevent the aerators from freezing solid in an ice cover, or special provisions shall be made for aerator start-up under icing conditions.

e. Aerator accessibility shall be provided for periodic and major maintenance repairs. Access bridges shall be designed so as to provide structural support for necessary maintenance and removal equipment. Safety railings shall be corrosion resistant. Adequate provisions shall be made for easy aerator/motor removals.

f. A positive means of controlling the minimum liquid depth or other means shall be provided to prevent scouring of the pond bottom and destruction of the bottom seal.

18C.6.4.6 Floating Surface Aerators

a. Floating surface aerators shall be of the submerged motor type or the subsurface horizontally mixing aspirator type. As a minimum, one surface aerator shall be installed for each acre of aerated lagoon surface area and at least two aerators in each primary cell.

b. Floating surface aerators shall be anchored in at least three directions or attached to secure structural framing or bridging.

c. The floating aerator shall be designed to prevent icing conditions or tipping problems caused by an ice buildup on one side or on top of the unit.

d. A positive means of controlling the minimum liquid depth or other means shall be provided to prevent scouring of the pond bottom and destruction of the bottom seal.

e. Adequate means shall be provided to prevent failure of operation of aspirator type aerators due to freezing or icing conditions.

f. Provisions shall be made for removal of floating aerators.

18C.6.5 Modifications to Existing Lagoons

Frequently the conversion of the conventional lagoon system to an aerated lagoon system can be the most economical and practical means of upgrading a facility to meet applicable effluent limits. In those cases the requirements that apply to new construction may be modified or waived, subject to the following limitation.

If the basis of design for the conversion to an aerated system includes an additional load greater than 25% of the present hydraulic load or 10% of the present organic load to accommodate population or industrial growth the design must meet the criteria for new construction.

18C.7 POND CONSTRUCTION DETAILS

18C.7.1 Pond Shape

18C.7.1.1 General

The shape of all cells should be such that there are no narrow or elongated portions. No islands, peninsulas or coves shall be permitted. Dikes should be rounded at corners to minimize accumulations of floating materials. Common dike construction, wherever possible, is strongly encouraged. Individual cells must be separated by earthen dikes except that the quiescent cell or zone may be formed by baffling off an area in the final aerated cell. Additional baffling in any cell can be provided to prevent short circuiting.

18C.7.1.2 Controlled Discharge Ponds

Round, square or rectangular cells with a length not exceeding three times the width are considered most desirable.

18C.7.1.3 Aerated Facultative Ponds

Aerated lagoons shall have a minimum length to width ratio of 2:1 and a maximum length to width ratio of 5:1 for each of the first two cells. A similar ratio is recommended for any additional aerated cells but is not mandatory. The inlet-outlet structures should be located in a manner that assures thorough mixing of all wastes.

18C.7.2 Embankments and Dikes

18C.7.2.1 Material

Dikes shall be constructed of relatively impervious material and compacted to at least 90 percent Standard Proctor Density to form a stable structure. Vegetation and other unsuitable materials

should be removed from the area upon which the embankment is to be placed.

18C.7.2.2 Top Width

The minimum dike top width shall be eight feet to permit access of maintenance vehicles except for systems where the total surface area does not exceed one acre, a minimum top width of six feet will be acceptable. A vehicle turnaround point or complete loop shall be included for vehicle access.

18C.7.2.3 Maximum Slopes

Inner and outer dike slopes shall not be steeper than 3 horizontal to 1 vertical (3:1).

18C.7.2.4 Minimum Slopes

Inner slopes should not be flatter than 4 horizontal to 1 vertical (4:1). Flatter slopes can be specified for larger installations because of wave action but have the disadvantage of added shallow areas being conducive to emergent vegetation. Outer dikes shall be designed and constructed to preclude surface runoff from entering the ponds by providing a minimum channel depth of one foot on the outer slope of the dike.

18C.7.2.5 Freeboard

Minimum freeboard shall be two feet. Additional freeboard may be required for large and/or elongated cells where severe wave action could occur.

18C.7.2.6 Design Depth

The minimum operating depth should be sufficient to prevent damage to the dikes, bottom, control structures, aeration equipment and other appurtenances. In no case should pond operating depths be less than two feet.

18C.7.2.7 Erosion Control

Erosion protection for all ponds, regardless of size, shall be provided. Such protection may be provided via the use of concrete or asphaltic aprons, stone riprap or artificial membranes. The minimum thickness of stone riprap protection shall be 6". Placement of riprap or other erosion protection devices should be such that quiescent areas, conducive to mosquito breeding, are not formed.

The erosion protection for all ponds cells shall be provided completely around the inner embankments and shall be placed from two feet below the minimum operating depth to at least one foot above the maximum operating depth (measured on the vertical). Additional height of erosion protection devices may be required for large and/or elongated cells where severe wave action could occur, and should be determined as a function of reach and wind velocity.

18C.7.2.8 Additional Erosion Protection

Riprap or an equivalent method of erosion control is required around all piping entrances and exits. Additional erosion control may be required on the exterior dike slope(s) to protect the embankment(s) from erosion due to severe flooding of an adjacent water course.

18C.7.2.9 Seeding

The dikes shall have a minimum cover layer of four inches of fertile topsoil to promote establishment of an adequate vegetative cover wherever riprap is not utilized. Perennial-type, low-growing, spreading grasses that withstand erosion and can be mowed are recommended for seeding of dikes. Alfalfa and other long-rooted crops shall not be used for seeding since the roots of this type are apt to impair the water holding efficiency of the dikes.

18C.7.3 Pond Bottom

18C.7.3.1 Soil

Soil used in constructing the pond bottom (not including seal) and dike cores shall be relatively incompressible and tight and compacted at or up to four percent above the optimum water content to at least 90 percent Standard Proctor Density.

18C.7.3.2 Seal

Ponds shall be sealed such that seepage loss through the seal is as low as practically possible. The percolation rate shall not exceed 1/16 inch per day at a water depth of six feet.

Soil seals must include bentonite or equivalent clay material in addition to optimum compaction. Where bentonite is used, the minimum seal thickness shall be four inches. In lieu of bentonite, alternate sealing materials such as membranes, soil cement or asphalt may be used.

Synthetic liners shall have a minimum thickess of 30 mills and shall be installed under the supervision of a qualified manufacturer's representative. The synthetic liner shall be anchored at the dike berm and shall be vented if gas generation from decaying organic material or air pumping from a fluctuating groundwater table is a potential problem.

There may be special conditions when reinforced membranes should be considered where extra tensile strength is required. The membrane liner material should be compatible with the contents of the ponds such that no damage results to the liner. The subgrade should be graded and compacted so that there are no holes or exposed angular rocks or pieces of wood or debris. If the subgrade is very gravelly and contains angular rocks that could possibly damage the liner, a minimum bedding of 3 inches of sand should be provided directly beneath the liner.

Following construction of the pond, the results of a testing program which indicates the adequacy of the seal shall be provided to this Department in writing prior to start up of operation. Where water is available, the seal testing should be accomplished by prefilling the pond to a minimum depth of six feet. Beginning not less than seven days after filling is completed, testing shall be performed to determine the water loss through the bottom and the embankments of the pond. The calculations for the water loss value must consider the influences of precipitation and evaporation during the test.

An acceptable alternate method for testing the pond seal would be to have such testing performed by a soils testing laboratory. Tests shall be performed on undisturbed soil samples which are collected in accordance with the procedure set forth by ASTM D-1587 and analyzed to determine the coefficient of permeability. The soil samples shall have a minimum depth of six inches. The testing shall be done at a head equivalent to a six foot pond operating depth.

At least one soil sample per acre shall be tested with a minimum requirement of two samples per cell. Selective testing shall be made to sample both the pond bottom and inner embankment slopes below the maximum operating depth. Using the coefficient of permeability, the rate of loss of wastewater through the seal shall be determined.

If unsatisfactory test results are obtained by either of the above test procedures, the pond shall be drained, if necessary, and reworked with additional testing performed until an adequate seal is obtained.

18C.7.3.3 Over-Excavation

For earthen ponds, a minimum over-excavation of two feet shall be required in cases where the bottom materials contain sand seams, gravel, or are generally unfit for pond bottom construction. The two foot excavation shall be replaced by suitable homogeneous bottom material prior to compaction and sealing.

18C.7.3.4 Uniformity

The pond bottom shall be as level as possible at all points. Finished elevations shall not be more than ± 3 inches from the average elevation of the bottom.

18C.7.4 Influent Lines

18C.7.4.1 Material

Pond influent lines should be of cast iron, ductile iron, or asbestos bonded, bituminous coated corrugated metal. For other materials selected, consideration must be given to the quality of the wastes, exceptionally heavy external loadings, abrasion, soft foundations and similar problems.

18C.7.4.2 Influent Structure

An influent structure shall be installed prior to entrance of the influent line into the pond and shall be located within or as close to the pond dike as topography permits. The influent sewer invert shall be at least six inches above the maximum operating level of the pond and provide sufficient hydrualic head without surcharging the manhole. The six inch requirement may be reduced on gravity systems if sufficient head is not available, but the influent sewer invert elevation

shall be no less than the maximum operating level of the pond and shall provide sufficient hydraulic head without surcharging the interceptor sewer.

18C.7.4.3 Flow Distribution

Flow distribution structures for ponds having multiple primary cells shall be designed to effectively split hydraulic and organic loads equally to the primary cells.

18C.7.4.4 Location

Influent lines for controlled discharge ponds shall be located along the bottom of the pond so that the top of the pipe is just below the average elevation of the pond seal; however, an adequate soil seal shall be provided around the pipe. The construction method used in the installation of the influent line shall assure that the pipe is not damaged during the installation.

18C.7.4.5 Point of Discharge

All primary cells for controlled discharge ponds shall have individual influent line(s) which terminate at approximately the center of the cell for proper solids dispersion. Consideration should be given to multi-influent discharge points for large primary cells to enhance distribution of wasteload on the cell.

All primary cells for aerated ponds shall have influent lines which distribute the load within the mixing zone of the aeration equipment to assure complete mixing of the incoming waste. For surface aerators the inlet should be beneath or in immediate proximity to one aerator. Consideration of multi-inlets should be closely evaluated for any diffused aeration systems. Discharge into each cell should be at the opposite end from the drawoff out of the cell to enhance plug flow and minimize short circuiting.

18C.7.4.6 Influent Discharge Apron

The influent line(s) shall discharge horizontally into a shallow saucer-shaped depression which has a radius of at least 50 feet for the primary cell(s) of a controlled discharge pond. Smaller depressions for ponds having a total area less than one acre and for secondary cells will be approved on a case-by-case basis. The depression

shall have a minimum depth of one foot and a maximum depth of one foot plus the influent pipe diameter. Proper sealing of the depression shall be provided.

The end of the discharge line(s) shall rest on a suitable concrete apron located at the center of the inlet depression which is large enough such that the terminal influent velocity at the end of the apron does not cause soil erosion. A minimum size apron of two feet square shall be provided.

18C.7.5 Control Structure

Facilities design shall consider the use of multi-purpose control structures, where possible, to facilitate normal operational functions such as drawdown and flow distribution, flow and depth measurement, sampling, pumps for recirculation, chemical addition and mixing and to minimize the number of construction sites within the dikes.

As a minimum, control structures shall be: (a) accessible for maintenance and adjustment of controls; (b) located such that dike maintenance and dike travel are not hindered (centered and flush with top dike grade or to side of and adjacent to top of dike); (c) adequately ventilated for safety and to minimize corrosion; (d) locked to discourage vandalism; (e) contain controls to allow variable water level and flow rate control, complete shut-off and draining to the two foot level; (f) constructed of non-corrosive materials (metal on metal contact in controls should be of like alloys to discourage electrometallic reactions); (g) located to minimize short circuiting within the cell; and, (h) protected against freezing and ice damage. Consideration should also be given to providing flexibility for regulation of pond elevation for operational purposes.

Individual unit isolation, dewatering and transfer capabilities shall be designed to provide flexibility in operation and maintenance. Either elevation differential or pumping capabilities may be used to provide this flexibility.

18C.7.6 Pond Piping

18C.7.6.1 Material

All pond withdrawal and transfer piping shall be of cast iron, ductile iron, PVC, or asbestos bonded, bituminous coated corrugated metal pipe. Pipes should be anchored with adequate erosion control.

18C.7.6.2 Hydraulic Capacity

a. The hydraulic capacity for intermittent discharge structures and piping for controlled discharge systems shall permit transfer of water at a minimum rate of six inches of pond water depth per day at the maximum design head.

b. The hydraulic capacity for continuous discharge structures and piping for aerated pond systems shall allow for a minimum of 250 percent of the design flow of the system or MWW flow, whichever is greater.

18C.7.6.3 Interconnecting Piping

Interconnecting piping for series operation of aerated pond cells and interconnection between divided primary cells and between secondary cells of controlled discharge ponds shall be valved or provided with other arrangements to regulate flow between the cells. Interconnecting pipes should discharge horizontally onto splash blocks and be terminated as near the dividing dike as construction permits. The piping shall be located at the two foot minimum depth (from the bottom of the cell) for controlled discharge ponds and between the two foot and three foot depth (from the bottom of the cell) for aerated ponds.

18C.7.6.4 Controlled Discharge Drawdown Structure Piping

a. Multi-Level Drawoffs

A minimum of two drawoff levels must be provided from each primary cell to the secondary cells, and a minimum of three drawoff levels from each secondary cell to the receiving stream. The bottom drawoff pipe shall be at the two foot depth, and the remaining pipes shall be evenly spaced to permit adequate drawoff of optimum quality cell effluent.

b. Scum Control

Provisions shall be included to insure that scum and floating materials shall not be drawn off with the cell effluent. Minimum requirements shall be either 90° elbows on each drawdown pipe, or the adequate sloping of each drawdown pipe.

18C.7.6.5 Aerated Facultative Pond Discharge Structure Piping

a. Multi-Level Drawoffs (Quiescent Cell)

For ponds that are designed deep enough to permit stratification of pond content, multiple drawoffs are required, and there shall be a minimum of two withdrawal pipes at different elevations. For use under constant discharge and warm weather conditions, a near surface overflow type withdrawal is recommended in order to withdraw the best effluent. Submerged withdrawal is recommended under cold weather conditions to avoid freezing problems.

b. Scum Control

The design shall include provisions to insure that scum and floating materials shall not be drawn off with the cell effluent.

18C.7.7 Prefilling

Where water is available, the pond shall be prefilled to the two foot level (or to the level at which the aeration equipment can effectively operate) to protect the liner, to prevent weed growth, to encourage rapid startup of the biological process and discourage odor, to reduce freeze up problems for late fall startups, to confirm the seal's integrity (as discussed in Section 18C.7.3.2) and to maintain the water content of the soil at or above optimum. However, the dikes must be completely prepared and sealed as described in Sections 18C.7.2 and 18C.7.3 before the introduction of water. Water for prefilling may be taken from the municipal water supply system or a nearby lake or stream. The use of water from a non-permitted source must be registered with this Department prior to initiation as required by 900--51.8(5) of the Iowa Administrative Code. The raw sewage influent alone should not be used for prefilling purposes.

18C.7.8 Cell Dewatering

The piping/pumping configuration shall be designed such that no discharge to the receiving stream will occur below the level of two feet for the secondary cells or directly from any level in the primary cell(s). Access to control and valving structures for cell drain lines shall be provided for maintenance and to insure the complete closure of such lines when not in operation.

18C.8 FLOW MEASUREMENT

Provisions for flow measurement for controlled discharge and aerated facultative pond systems shall be included as follows:

18C.8.1 Influent

The design shall include equipment and structures required to measure and record flow rates, and obtain 24-hour composite samples. Weirs shall not be used for influent flow measurement except for very low flows where self-flushing flow measuring devices are not accurate. Elapsed time meters (ETMs) with an event recorder on lift station pump controls will generally be an acceptable method of providing continuous influent flow monitoring for wastewater treatment pond systems (except when screw pumps or variable speed pumps are used).

18C.8.2 Effluent

Effluent flow measurement facilities shall be provided for all wastewater treatment ponds; however, continuous recording capabilities are not required. The capacity of such facilities for controlled discharge ponds must be adequate to measure maximum discharge rates. A V-notch weir without level monitoring equipment is permitted for measuring intermittent discharges from controlled discharge facilities.

18C.8.3 Small Facilities

Continuous flow measurement and recording requirements may be waived for any small wastewater treatment pond systems less than 100 P.E. Flow measurement devices should still be provided, however, and the design of the structure shall facilitate the installation of continuous flow recording equipment and automatic samplers.

18C.8.4 Equipment Protection

Effective weather and vandalism protection shall be provided for the flow measurement and recording equipment.

18C.8.5 Structures

Flow measurement structures shall have a diameter of at least five feet. The sidewalls shall be extended vertically to the top of the structure. The access opening shall be sufficiently large to provide easy access and adequate lighting and ventilating of the structure whenever entrance is necessary.

18C.9 DISINFECTION

18C.9.1 Application

Disinfection facilities for aerated facultative pond systems will only be required to comply with the fecal coliform criteria for Class A waters or waters entering a sinkhole. Specific effluent limitations for all aerated facultative pond systems impacting these waters will be determined by the Department. These specific effluent limitations will then guide the need for or type of disinfection equipment.

Disinfection facilities may be required for aerated facultative pond systems where the discharge is to a stream which flows through a residential area. Such determination will be made on a case-by-case basis. The need for positive disinfection of non-domestic wastes will also be determined on a case-by-case basis.

18C.9.2 Location

For aerated facultative ponds, disinfection facilities, to include flash mixing of the disinfectant at the point of application, should be located prior to the quiescent cell. An optional point of application would be after the quiescent cell which would include flash mixing and chlorine contact facilities (if chlorine is used as the disinfectant).

18C.10 MISCELLANEOUS

18C.10.1 Fencing

The pond area shall be enclosed with an adequate fence to prevent entering of livestock and discourage trespassing. Fencing should not obstruct vehicle traffic on top of the dike. A vehicle access gate of sufficient width to accomodate mowing equipment shall be provided. All access gates shall be provided with locks.

18C.10.2 Access

An all-weather access road shall be provided to the pond site to allow year-round maintenance of the facility.

18C.10.3 Warning Signs

Appropriate permanent signs shall be provided along the fence around the pond to designate the nature of the facility and advise against trespassing. At least one sign shall be provided on each side of the site and one for every 500 feet of its perimeter.

18C.10.4 Groundwater Monitoring

An approved system of groundwater monitoring wells or lysimeters may be required around the perimeter of the pond site to facilitate groundwater monitoring. The need for wells and/or lysimeters will be determined on a case-by-case basis by this Department.

18C.10.5 Laboratory Equipment

For laboratory equipment refer to Chapter 14 of the Design Standards.

18C.10.6 Pond Level Gauges

Pond level gauges shall be provided for all cells of controlled discharge ponds. Such devices shall be permanently installed to allow easy observation of pond operational depths. The use of a calibrated mast, pipe, or inclined concrete section of the dike may be used. If a calibrated mast or pipe is utilized, the mast or pipe shall be adequately anchored. Wooden staff gauges will not be approved. The outlet control structures may also be utilized for depth measurement if properly and permanently calibrated.

18C.10.7 Service Building

Consideration in design should be given to a service building for laboratory and maintenance equipment.

APPENDIX 18C-A

Derivation of Reaction Formula

$$t = \frac{E}{2.3\ K_1 \times (100 - E)}$$

t = detention time, days
E = percent BOD_5 to be removed
K_1 = reaction coefficient

Above formula was developed from the following equations and assumptions:

1. $-\frac{dC}{dt} = K_e\ C$ (1st order kinetics)

2. $-\frac{dC}{dt} V = Q\ (Co - C)$ (complete mix reactor)

Co = concentration, influent (mg/l)
C = concentration, within reactor and effluent (mg/l)
Q = flow rate (MGD)
K_1 = reaction of coefficient ($time^{-1}$)
V = volume of reactor (MG)

Combining equations 1 & 2 with $E = \frac{Co - C}{Co} \times 100$;

(where E = efficiency)

$$\text{Gives } t = \frac{E}{2.3\ K_1 \times (100 - E)}$$

i.e.,

By combining equations 1 and 2, $K_e\ C = \frac{Q}{V}\ (Co - C)$

Also since $\frac{Q}{V} = \frac{1}{t}$ then $K_e\ C = \frac{Co - C}{t}$ or $t = \frac{Co - C}{K_c\ C}$

Combining, $t = \frac{Co - C}{K_e\ C}$, $\frac{Co - C}{Co}\ 100 = E$, and $K_e = 2.3\ K_1$ ($\ln = 2.3 \log_{10}$)

$$\text{Produces } t = \frac{E}{2.3\ K_1 \times (100 - E)}$$

APPENDIX 18C-B

WASTEWATER TREATMENT POND FLOW SCHEMATICS

FOR PIPING AND RELIABILITY

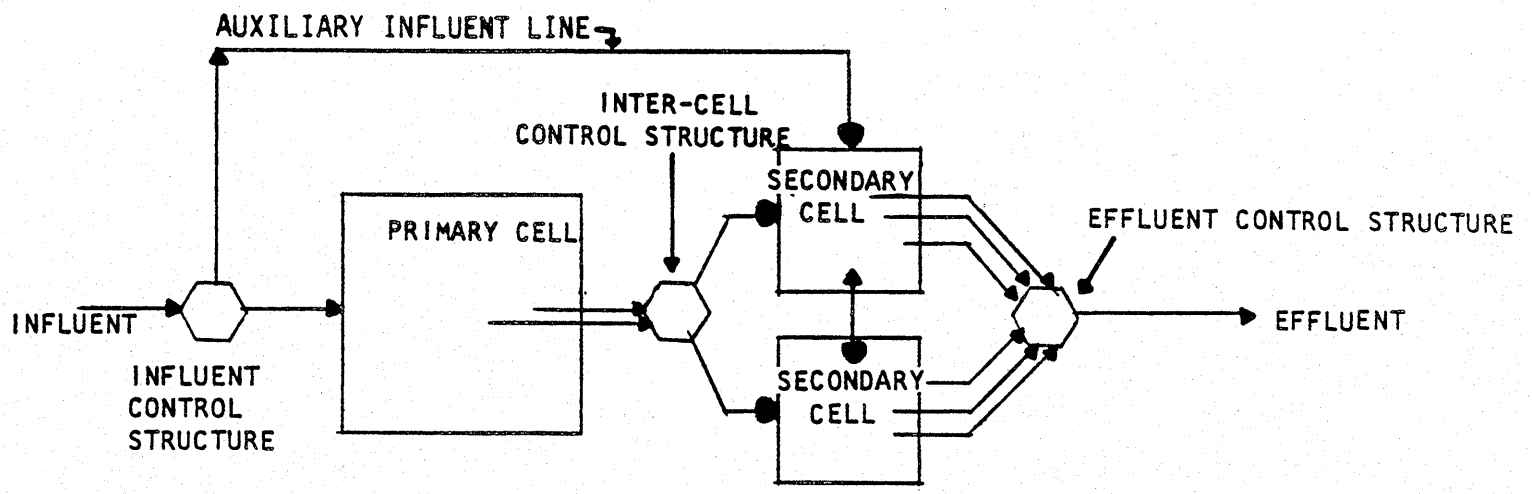

3-CELL CONTROLLED DISCHARGE POND SYSTEM

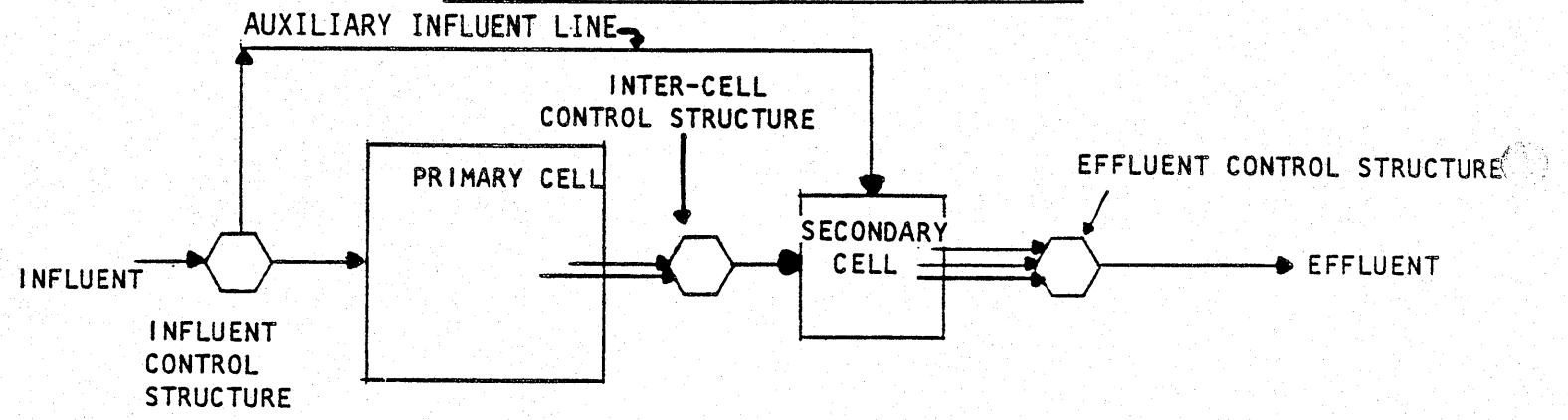

2-CELL CONTROLLED DISCHARGE POND SYSTEM

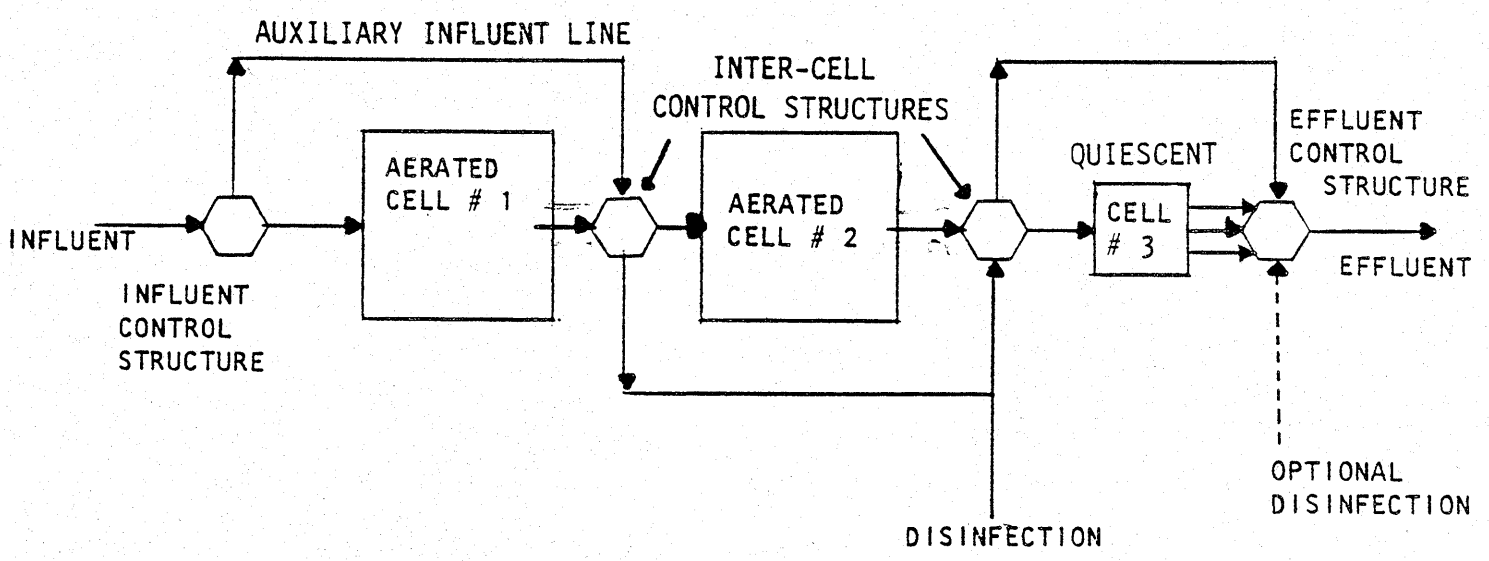

AERATED FACULATIVE POND SYSTEMS

APPENDIX 18C-C

TYPICAL 2 - CELL CONTROLLED DISCHARGE POND

180 DAYS TOTAL STORAGE ABOVE THE 2' DEPTH LEVEL PROVIDED
(STORAGE BASED UPON WETTEST CONSECUTIVE 180 DAY FLOW PERIOD)

MAXIMUM TOTAL SURFACE AREA FOR 2 CELL SYSTEMS OF 1 ACRE

PRIMARY CELL AREA APPROXIMATELY 2/3 OF TOTAL SURFACE AREA

SECONDARY CELL MINIMUM STORAGE OF 60 DAYS

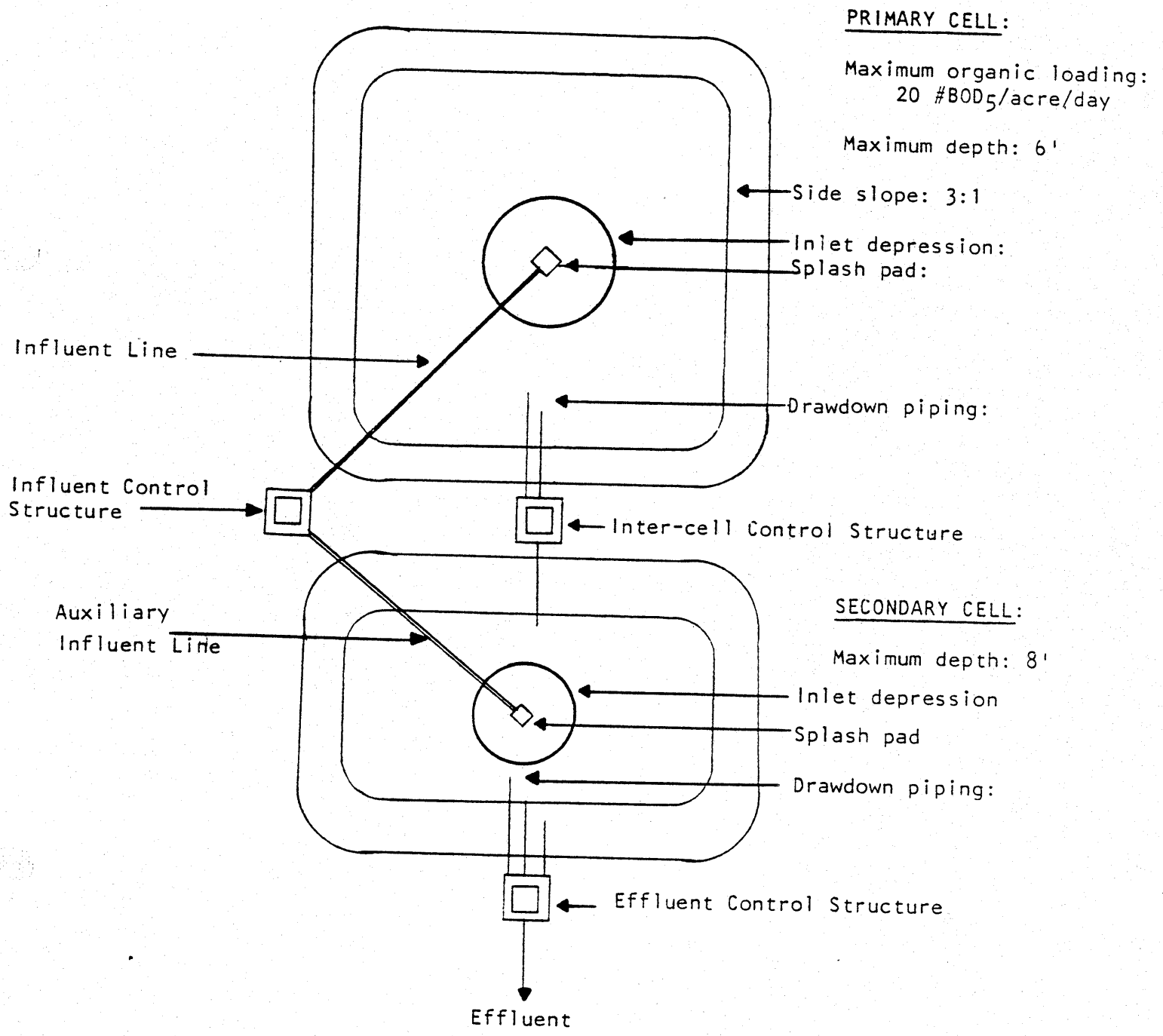

APPENDIX 18 C-D

TYPICAL 3 - CELL CONTROLLED DISCHARGE POND

180 DAYS TOTAL STORAGE ABOVE 2' DEPTH LEVEL PROVIDED
SECONDARY CELLS - 30 DAYS STORAGE EACH (MINIMUM)
(STORAGE BASED UPON WETTEST CONSECUTIVE 180 DAY FLOW PERIOD)

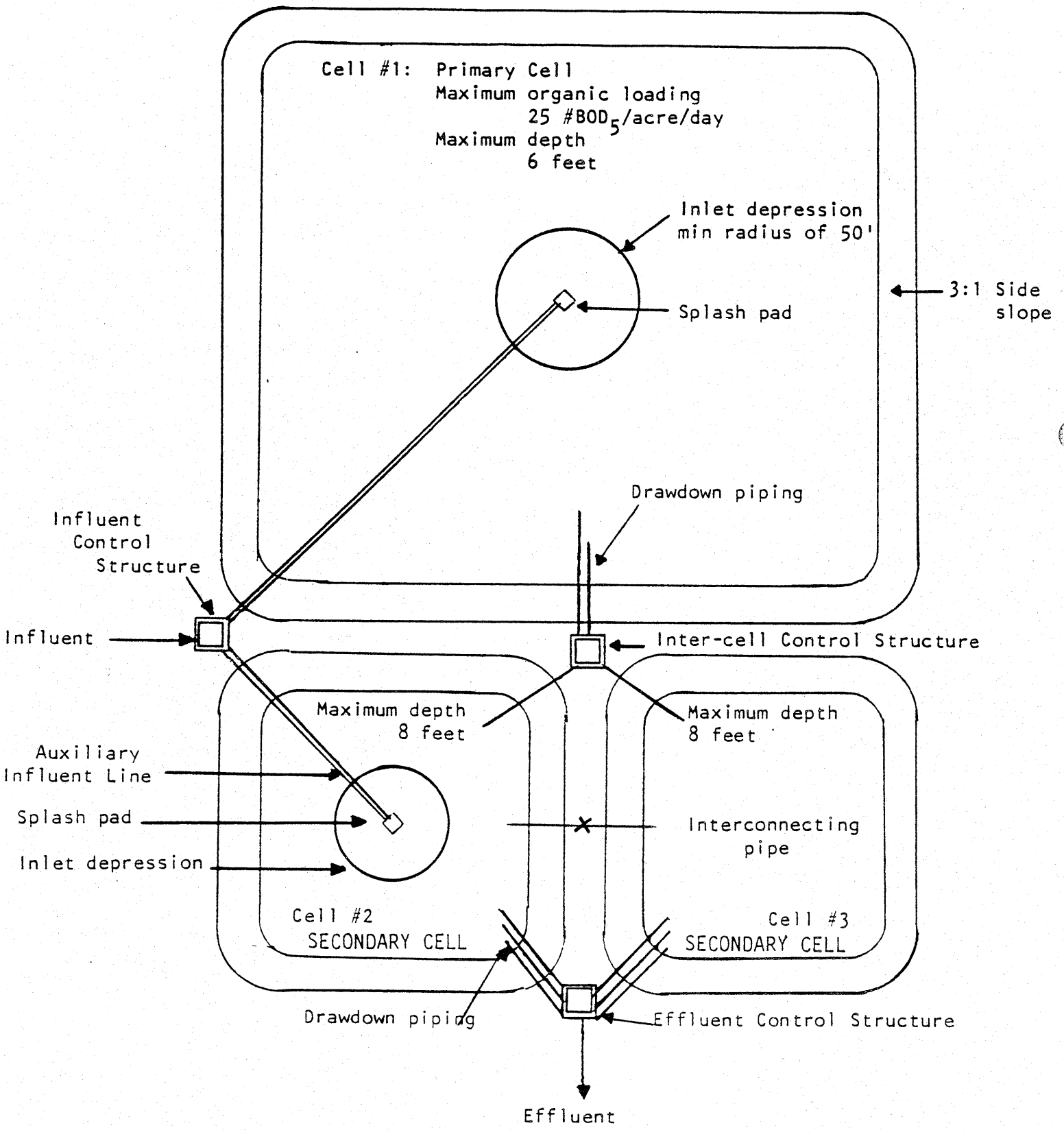

APPENDIX 18C-E

TYPICAL 4 - CELL CONTROLLED DISCHARGE POND
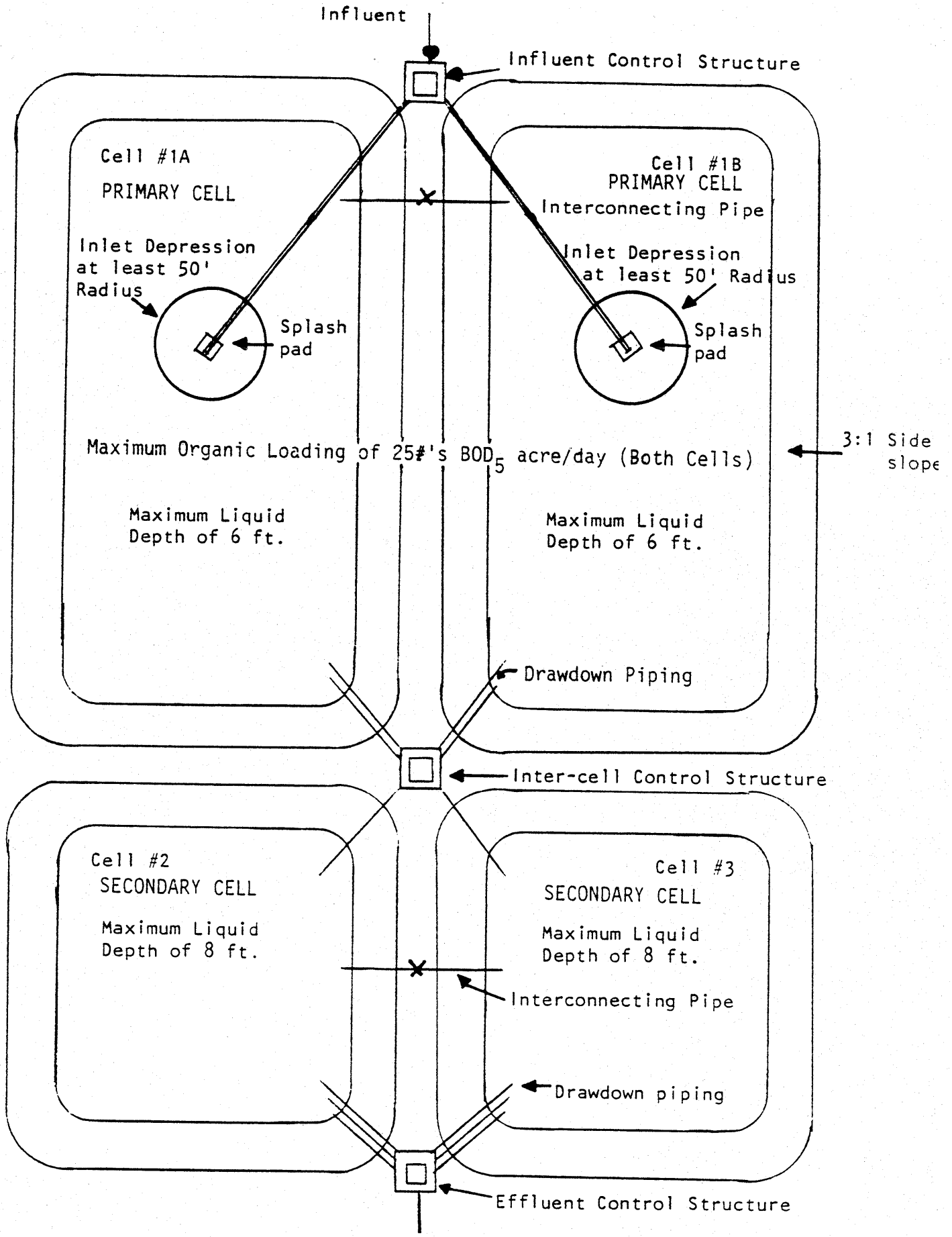
180 DAYS TOTAL STORAGE ABOVE 2' DEPTH LEVEL PROVIDED:
SECONDARY CELLS - 30 DAYS STORAGE EACH (MINIMUM)
(STORAGE BASED UPON WETTEST CONSECUTIVE 180 DAY FLOW PERIOD)