Feasibility Study
Leachate Recirculation System
Landfill of North Iowa
Clear Lake, Iowa

AECOM #60303047

Prepared For:
Landfill of North Iowa
15942 Killdeer Avenue
Rural Route 2
Clear Lake, Iowa 50428

Prepared By:
AECOM
501 Sycamore Street, Suite 222
P.O. Box 1497
Waterloo, Iowa 50704-1497

January 2014

FEASIBILITY STUDY
LEACHATE RECIRCULATION SYSTEM
Landfill of North Iowa

1.0 INTRODUCTION

The Landfill of North Iowa (LNI) has asked AECOM to complete a feasibility study to improve leachate management and expand leachate recirculation. LNI currently surface applies leachate to Cell A, Phase 1 with a trailer-mounted tank and diffuser when conditions allow. This cell was previously filled to within 5 feet of the permitted elevation and has temporary cover over the surface which is graded to keep all the leachate within the cell boundary. There is approximately 20 feet of waste in Cell A, Phase 1. The balance of the leachate is transported to the Mason City Wastewater Treatment Plant

In 2012, the landfill generated approximately 700,000 gallons of leachate. Approximately 230,000 gallons were transported to Mason City for treatment and approximately 470,000 gallons were applied to Cell A, Phase 1.

The goal of this recirculation system is to reduce or eliminate the cost of hauling and processing the leachate in Mason City. At a minimum, the system will provide a means for LNI to haul leachate to Mason City on a more efficient schedule.

This feasibility study proposes two methods of leachate recirculation at the landfill: surface application and horizontal piping installed within the waste mass or horizontal injection. The proposed leachate recirculation system will consist of a 1,000,000-gallon leachate lagoon, pump station and force main. During the summer months, the leachate will be applied to the active area with a series of sprinklers. During the winter months and wet weather conditions, the leachate will be recirculated utilizing a series of French drain-type infiltration galleries.

1.1 DESIGN DETAILS

1.1.1 COMPOSITE LINER SYSTEM

Cell A, Phase 1 utilizes a composite liner system to protect the environment from the deposited waste and the leachate and gas it produces. The composite liner system is protected by a 1-foot groundwater collection layer because it is possible that the groundwater present at the site could infiltrate the composite liner from below. The groundwater captured is drained to a sump where it is currently pumped to a creek that runs near the site. The following is a breakdown of the composite liner system that is constructed directly under the leachate collection system.

- Composite Liner System, consisting of (from the top down):

  a) 8-oz Separation Geotextile
  b) 60 mil High-Density Polyethylene (HDPE) Geomembrane
  c) 2-ft Clay Liner
  d) 1-ft Earth Liner
  e) 8-oz Separation Geotextile
  f) 1-ft groundwater Collection Layer

1.1.2 DRAINAGE LAYER

A granular leachate drainage layer exists over the base and side slopes of the composite liner system. The drainage layer is a clean sand or gravel that is durable, inert, washed, coarse rounded to sub-angular, non-calcareous, silica quartz-based gravel or crushed gravel (non-reactive when in contact with landfill leachate), with a permeability of $1x10^{-2}$ cm/sec or greater. During the construction of this cell, the drainage layer was sampled and tested for permeability. The on-site permeability was $5.7x10^{-2}$ cm/sec. This number will be used for later HELP model calculations.

1.1.3 LEACHATE COLLECTION SYSTEM DESIGN

The leachate collection system is designed to promote gravity flow of leachate through the granular leachate drainage layer to collection pipes. The leachate collection pipes in Cell A, Phase 1 cut the cell in thirds (east/west axis) and slope at 1% toward leachate sumps. Access is provided via a side-slope riser to allow water jet cleaning. Leachate pipe cleaning is performed once every three years.

There are two leachate collection systems being considered in this study, one for Cell A and another for the Existing Lined Disposal Area. The leachate collection lines are 6 inches in diameter perforated HDPE SDR 11 pipes. The leachate collection pipes are placed within shallow trenches and are bedded with coarse aggregate. The leachate is pumped from the sumps to the two underground leachate storage tanks where the leachate is either removed for recirculation or transported to Mason City.

1.1.5 IOWA DNR RULES – LEACHATE RECIRCULATION

Below are the current rules and procedures that the Iowa DNR requires for LR.

a. Leachate application is restricted to only those MSWLF units with a composite liner constructed in accordance with paragraph 113.7(5) “a.”

b. The leachate recirculation system shall not contaminate waters of the state, contribute to erosion, damage cover material, harm vegetation, or spray persons at the MSWLF facility, pursuant to paragraph 113.8(2)“h.”

c. Leachate shall not be applied on user vehicle access areas.

d. Leachate shall not be applied to vegetated areas or frozen waste cover. A means of frost protection must be provided for all leachate control elements.

e. Leachate shall be applied evenly on the working area.

f. Leachate recirculation shall be conducted only during hours of operation and when an operator is on duty. If the system can be automated and shown to operate without issues, LNI may be able to get an exemption for this rule.

g. Leachate shall be applied in a manner such that ponding or runoff will not occur.

h. Leachate recirculation shall be controlled such that not more than 1 foot of leachate head will be allowed to accumulate above the MSWLF unit liner.

i. Records shall be maintained as to the time and quantities of leachate application and be submitted with the facility Annual Leachate Control System Performance Evaluation Report (LCSPER).

Leachate recirculation shall be immediately terminated if it causes ponding, runoff, excessive odor, vector control problems, vapor drift, ice formation or operational problems. The DNR's local Field Office shall be immediately notified if any of the above events occur.

2.0 LEACHATE RECIRCULATION CALCULATIONS

2.1 LEACHATE RECIRCULATION QUANTITY ESTIMATES

To determine leachate recirculation loading rates, it is first necessary to estimate the moisture absorption capacity of the waste, the hydraulic capacity of the waste mass, the hydraulic capacity of the leachate collection system, and leachate infiltration quantity. These items identify, respectively:

- How much leachate the waste mass will absorb.
- How much liquid can percolate through the waste mass to the leachate collection system.
- How much additional leachate the leachate collection system can handle without exceeding compliance leachate head levels.

The following sections summarize each evaluation.

2.1.1 MOISTURE ABSORPTION CAPACITY OF THE WASTE MASS

Porous materials such as solid waste have the ability to absorb and retain moisture. It is this ability to take on moisture that allows leachate to be recirculated into the waste mass. Solid waste can absorb moisture until the field capacity of the waste is reached. Field capacity is defined as the moisture content of the waste above which moisture will flow under the influence of gravity. Based on values reported in literature, typical municipal solid waste (MSW) has a field capacity between 40 to 60% (average 55%) and an average as-delivered moisture content of approximately 25%, on a dry weight basis. Literature indicates that after several years in-place, waste has an in-situ moisture content of approximately 49%.

The waste in-place in Cell A, Phase 1 has an absorptive capacity of 6% (the average field capacity of 55%, minus the average in-place moisture content of 49%). This is equal to about 10 gal/CY or 14 gal/ton assuming an average waste compaction of 1,400 lbs/CY. To be conservative, an absorption rate of 14 gal/ton of in-place MSW will be used for estimating maximum leachate loading rates (see Appendix B for the calculations).

The above numbers represent the volume of liquid that the MSW can absorb prior to reaching field capacity. However, to design the proposed leachate recirculation system, it is necessary to estimate an acceptable liquid application rate. One method of estimating a maximum leachate application rate is to use the hydraulic capacity of the waste mass (the rate at which liquid can flow through the waste), as discussed in the following section of this report.

2.1.2 HYDRAULIC CAPACITY OF THE WASTE MASS

Once waste has reached field capacity, the excess liquid will percolate downward through the waste mass. Channeling and preferential flow paths will also allow moisture to travel through the waste mass even before field capacity is reached. For design purposes, Darcy's law can be used to estimate the flow rate of leachate through the waste mass. Darcy's law is as follows:

Q = KIA where:
Q = Flow Rate
K = Hydraulic Conductivity
I = Hydraulic Gradient
A = Cross Sectional Flow Area

Values of in-field hydraulic conductivity reported in literature range between 1.0×10^{-3} to 1.0×10^{-7} cm/sec. An average hydraulic conductivity of 1.0×10^{-5} cm/sec was used for estimating the hydraulic capacity of the waste mass and a hydraulic gradient of 1 was selected for this analysis. For this calculation, the unit cross sectional flow area is 1 acre. The result of this analysis is a waste mass hydraulic capacity of approximately 9,200 gal/acre/day. Calculations are presented in Appendix B.

2.1.3 HYDRAULIC CAPACITY OF THE LEACHATE COLLECTION SYSTEM

In addition to evaluating the absorption capacity of refuse and the ability of the waste mass to allow moisture to percolate through it, the hydraulic capacity of the leachate collection system needs to be evaluated. Iowa Administrative Rule 113.7 requires the leachate collection system to be designed such that the system is capable of limiting the average leachate head level on the liner to 1 foot or less. The maximum leachate infiltration rate that the leachate collection system can handle without exceeding the head level standard can be calculated using the following equation developed by Harr, presented in <u>*Landfill and Surface Impoundment Performance Evaluation*</u>, prepared by the U.S. EPA, September 1980:

$$h_{max} = \left(l \sqrt{(e/k + \tan^2 \alpha)} - \tan \alpha \right)$$

Where:
- h = Maximum Allowable Leachate Head Build Up = 1-ft
- e = Infiltration Rate (To Be Determined)
- k = Permeability of Drainage Layer **=** 1.00 cm/sec
- l = Length of Flow Path to Leachate Piping = 105 ft, Maximum in All Phases
- α = Slope of the Base Liner Along the Leachate Flow Path = 3.0%

Using the above formula, the hydraulic capacity of the leachate collection system for Cell A, Phase 1 was calculated to be approximately 11,900 gal/acre/day. The calculations are presented in Appendix B.

The U.S. EPA Hydraulic Evaluation of Landfill Performance (or HELP) model was also run to check that the leachate drainage system is capable of handling recirculating all of the leachate produced. Using the worst case scenario of peak production day and a production rate 3,600 gal/acre/day, the resulting head on the liner was 11.8 inches. A HELP model report and calculations can be found in Appendix C. Therefore, the maximum leachate recirculation rate for LNI Cell A, Phase 1 is 3,600 gal/acre/day per Iowa Administration Rule 113.7.

Cell A, Phase 1 is approximately 8 acres; therefore, the yearly leachate recirculation capacity is approximately 8,000,000 gallons, assuming 280 operating days. The proposed leachate recirculation system will be automated. Given permission by IDNR to operate this system year around (assuming 350 recirculation days); the yearly volume could be increased to 10,000,000 gallons.

2.1.4 LEACHATE COLLECTION RATE ESTIMATE

From 2007 through 2013, LNI collected an average of approximately 1,500,000 gallons of leachate per year. Historically, LNI recirculated 40 to 60% of that leachate by surface application and delivered the rest to Mason City.

If all of the annual average 1,500,000 gallons of leachate was recirculated into Cell A, Phase 1, the average leachate application rate would be approximately 670 gal/acre/operating day (assuming 280 operating days per year). This rate is considerably less than the maximum allowable rate of 3,600 gal/ac/day used in the HELP model as described above.

The maximum monthly leachate collection rate for the period from January 2007 through June 2013 was approximately 1,100,000 gallons in March 2010. This month coincides with when Cell A, Phase 1 was

brought on-line, winter thaw and a wet spring. If that leachate collection rate was applied to the 8 acres of Cell A, Phase 1, the leachate application rate would be about 5,300 gal/acre/day. This rate is more than the maximum allowable rate of 3,600 gal/acre/day used in the HELP model, as described above. Therefore, during a similar maximum month, LNI would be required to store the balance in the proposed leachate lagoon for future recirculation during a dryer time.

3.0 CONCLUSIONS AND RECOMMENDATIONS

AECOM has shown through mathematical analysis that recirculation of all the leachate produced at LNI is feasible. In the previous section, it was proven that the leachate drainage layer can maintain less than 1 foot of head on the system and recirculation of all the leachate. The maximum allowable rate as described by Iowa Code is 3,600 gal/acre/operating day is greater than the average leachate production rate of 670 gal/acre/operating day derived from historical LNI leachate data. With the addition of the leachate lagoon, it is feasible to store the excess leachate during a maximum month for recirculation in future dryer periods.

3.1 LEACHATE APPLICATION METHODS

Various landfill owners and operators across the country have successfully used several methods of leachate recirculation. These include surface application at the working face, horizontal trenches within the waste mass, and vertical wells.

AECOM is proposing to use both surface application and horizontal trenches within the waste mass to recirculate leachate. By proposing horizontal trenches in addition to, or in lieu of, surface application, LNI will be able to determine which method is best suited for site operations at any given time. For either method, a 100-foot setback from the outboard slope will be used. This setback will help to prevent lateral drainage to outboard slopes. The use of a setback should reduce the potential for leachate seeps.

The leachate recirculation system will consist of a leachate lagoon, pump station, a distribution force main, a series of distribution trenches, and a surface application system, as described below. The pump station will consist of a submersible pump and controls located at the proposed leachate lagoon**.**

3.1.1 SURFACE APPLICATION

Surface application of leachate has been used successfully at LNI in the past. Surface application provides the best coverage of the area, is simple to operate and maintain, helps to improve compaction, and is not affected by differential settlement or plugging of pipes due to fines or biological growth.

Surface application is limited to days when precipitation and excessive winds are minimal, and to areas of the landfill in which the active waste-filling surface is not frozen. Containment is achieved by grading the active area to slope inward, and by construction of temporary berms. Truck traffic is not allowed across areas where surface application has recently occurred unless proper cover is placed over the area to prevent tracking of leachate outside of the fill area.

The rate of application is limited to the quantity that the waste mass can absorb without causing run-off, ponding, seeps, outbreaks, excessive odors, excessive head on the liner (>1 foot on average), as measured in the leachate head wells. If any of these conditions occur, the rate of application will be decreased, or surface application will be discontinued.

AECOM is proposing a series of sprinklers to be located on the surface of Cell A, Phase 1. These sprinklers will be connected to the force main from the leachate lagoon at the standpipe described in the previous section. The sprinklers will be activated by the staff and moved throughout the day to limit

ponding and to evenly distribute the leachate over the surface. A preliminary layout of the system is provided on Drawing No. 1 in Appendix A.

3.1.2 HORIZONTAL RECIRCULATION SYSTEM DESIGN

Since the landfill is actively accepting waste for disposal, the surface elevation of the cells will be dynamic over time. Therefore, the design for the horizontal system is somewhat generic so that it can be used throughout the active life of the site. A preliminary layout of the system is provided on Drawing No. 2 in Appendix A.

The horizontal leachate recirculation system will consist of a distribution force main and a series of distribution trenches. The leachate lagoon pump station will supply the distribution force main and trenches. The pump station will consist of a submersible pump, controls, timer and flow meter.

The leachate distribution force main will be connected to a series of distribution trenches. These trenches will be spaced approximately 100 feet apart and will slope away from the connection point at a minimum 1% slope. A wellhead will connect each distribution trench to the leachate distribution force main. A valve will be used to close off individual trenches or to balance distribution evenly between the trenches. The distribution trenches will be constructed with 6-inch diameter perforated HDPE pipe placed in a trench approximately 3 feet wide by 3 feet deep. The pipe bedding and initial backfill will be granular material such as gravel, tire chips, crushed glass or crushed concrete. Details of the distribution trenches are included on Drawing No. 3 in Appendix A.

3.1.3 LEACHATE LAGOON

The leachate lagoon will provide LNI with 1,000,000 gallons of leachate storage. This lagoon was sized to contain the largest leachate production month, which was March 2010. See Appendix B for the LNI historical data. The lagoon will remove the peaks of leachate production during wet months with ample storage space. This will allow LNI to recirculate those peaks over time and manage or eliminate hauling leachate to Mason City for treatment. The lagoon will utilize a composite liner with clay and geomembrane.

The leachate lagoon will be filled using the existing leachate tank pumps. The leachate will be transported back to Cell 1 using a pump station and force main, see Drawing No. 1 or No. 2. The pump will be equipped with manual controls and a timer to fill the horizontal trenches and operate surface application.

3.2 COST ESTIMATE

The following is a construction cost estimate for budgetary purposes. There is a 15% construction contingency and 15% for engineering, bidding, construction-related services and project administration added to the construction subtotal.

In 2012, there was approximately 230,000 gallons of leachate hauled to Mason City for treatment at a cost of approximately $15,000. That calculates to a cost of $0.07 per gallon. If this rate is used for the historically average year leachate production of 1,500,000 gallons, the cost for hauling the leachate to Mason City will be $105,000.00. Therefore, in approximately 11 years, this leachate recirculation system would pay for itself.

LEACHATE LAGOON					
Item No.	Item	Unit	Quantity	Cost	Total
1	Mobilization and Demobilization	LS	1.0	$40,000.00	$40,000.00
2	Site Preparation	LS	1.0	$5,000.00	$5,000.00
3	Common Excavation	CY	3,000.0	$3.00	$9,000.00
4	Lagoon Fill	CY	3,000.0	$4.00	$12,000.00
5	Clay Liner	CY	1,500.0	$4.00	$6,000.00
6	HDPE Pond Liner	SY	2,250.0	$6.00	$13,500.00
7	Pump Station	LS	1.0	$250,000.00	$250,000.00
8	Electrical Service	LS	1.0	$60,000.00	$60,000.00
9	Electrical and Controls	LS	1.0	$50,000.00	$50,000.00
10	4-Inch Double-Walled Force Main	LF	2,450.0	$75.00	$183,750.00
11	4-Inch HDPE Pipe Manifold and Stand Pipe	LS	1.0	$5,000.00	$5,000.00
12	Horizontal Injection Trench	LF	3,000.0	$75.00	$225,000.00
13	Sprinkler	EA	5.0	$50.00	$250.00
14	600-Foot Sprinkler Hose	EA	5.0	$300.00	$1,500.00
				Subtotal	$861,000.00
	15% Construction Contingency				$129,150.00
				Subtotal	$990,150.00
	15% Engineering, CRS, and Admin				$148,522.50
	Leachate Lagoon Estimate				**$1,138,672.50**

3.3 OPERATIONS

The horizontal leachate recirculation system and surface application of leachate will occur intermittently during the site's operating year. The actual frequency, duration and method of leachate recirculation will be dependent upon leachate quantities, weather, active area location and size, and available manpower.

AECOM anticipates that the horizontal injection method will be used primarily in the cold and wet weather. This method will allow LNI to recirculate when the surface is frozen or saturated from rain. The surface application method will be used in the warm weather months. This method will most evenly distribute the leachate and will take advantage of solar and wind evaporation.

Appendix A

Drawings

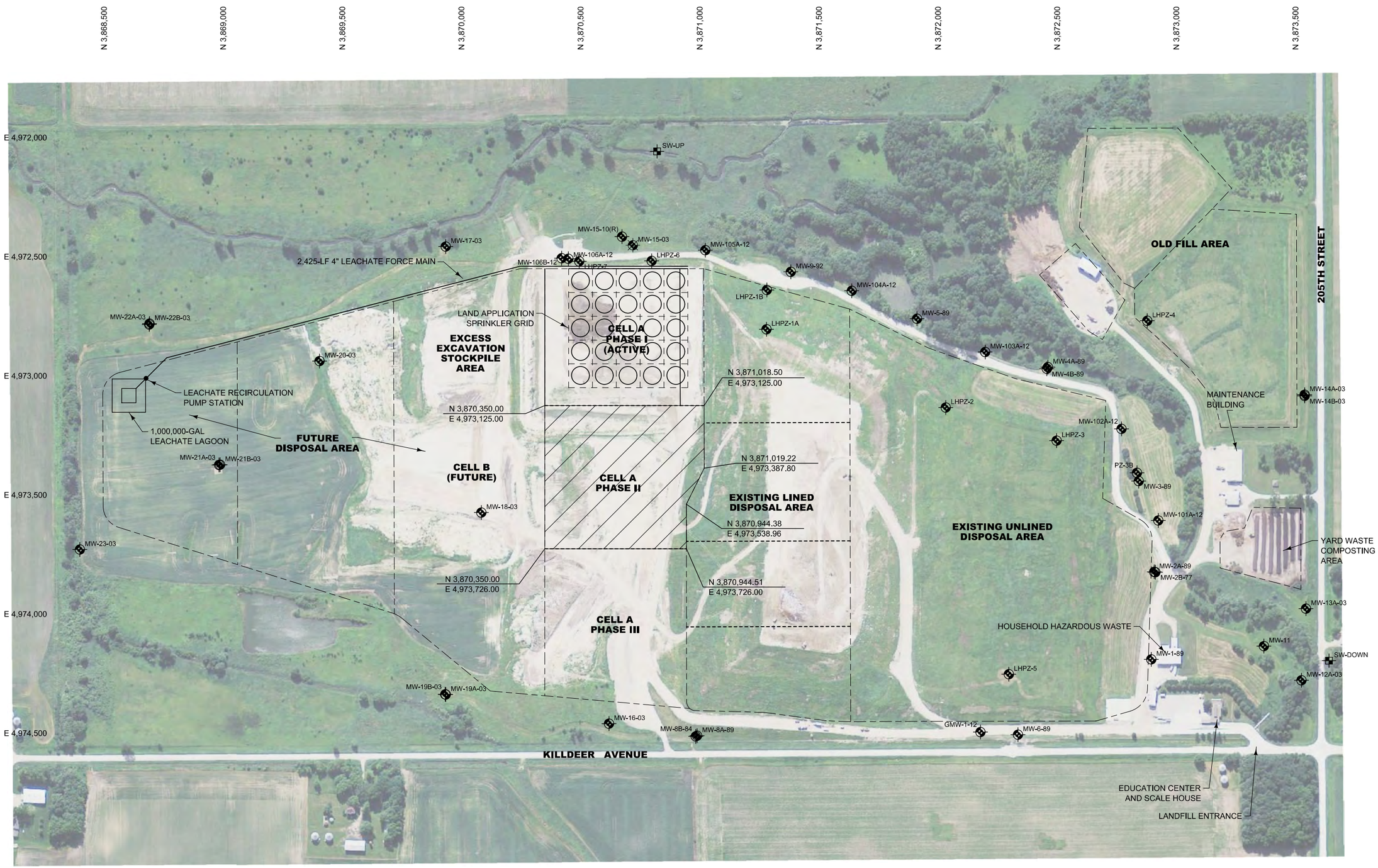

AERIAL SOURCE: SUMMER 2011

N

0' 100' 200' 400'
SCALE

REV	DESCRIPTION	DRN	CHK	DATE

1-INCH VERIFY SCALE IF PLAN SHEET IS REDUCED

DRN BSC
DES CGO
CHK BSC
APP

AECOM
501 Sycamore Street, Suite 222
Waterloo, Iowa 50704-1497
T 319.232.6531 F 319.232.0271
WWW.AECOM.COM

LNI LEACHATE FEASIBILITY STUDY

SURFACE APPLICATION

DATE SEPT 2013
PROJECT NO 60303047
FILENAME LNI-A-PHII-Civil.Sht
SHEET NO 1
DRAWING NO 1

Waterloo, Iowa
...\pltcfg\ltk17.pdf.pltcfg, ...\tables\pen\BSC.PEN.TBL
Plotted by: Kurt.Gaskins@aecom.com
12/4/2014, 12:12:44 PM
Design File P:\60303047\900-WorkingDocs\CAD\02-SHEETS\LNI-Recirc REV02-NO GW.Sht, Model 2

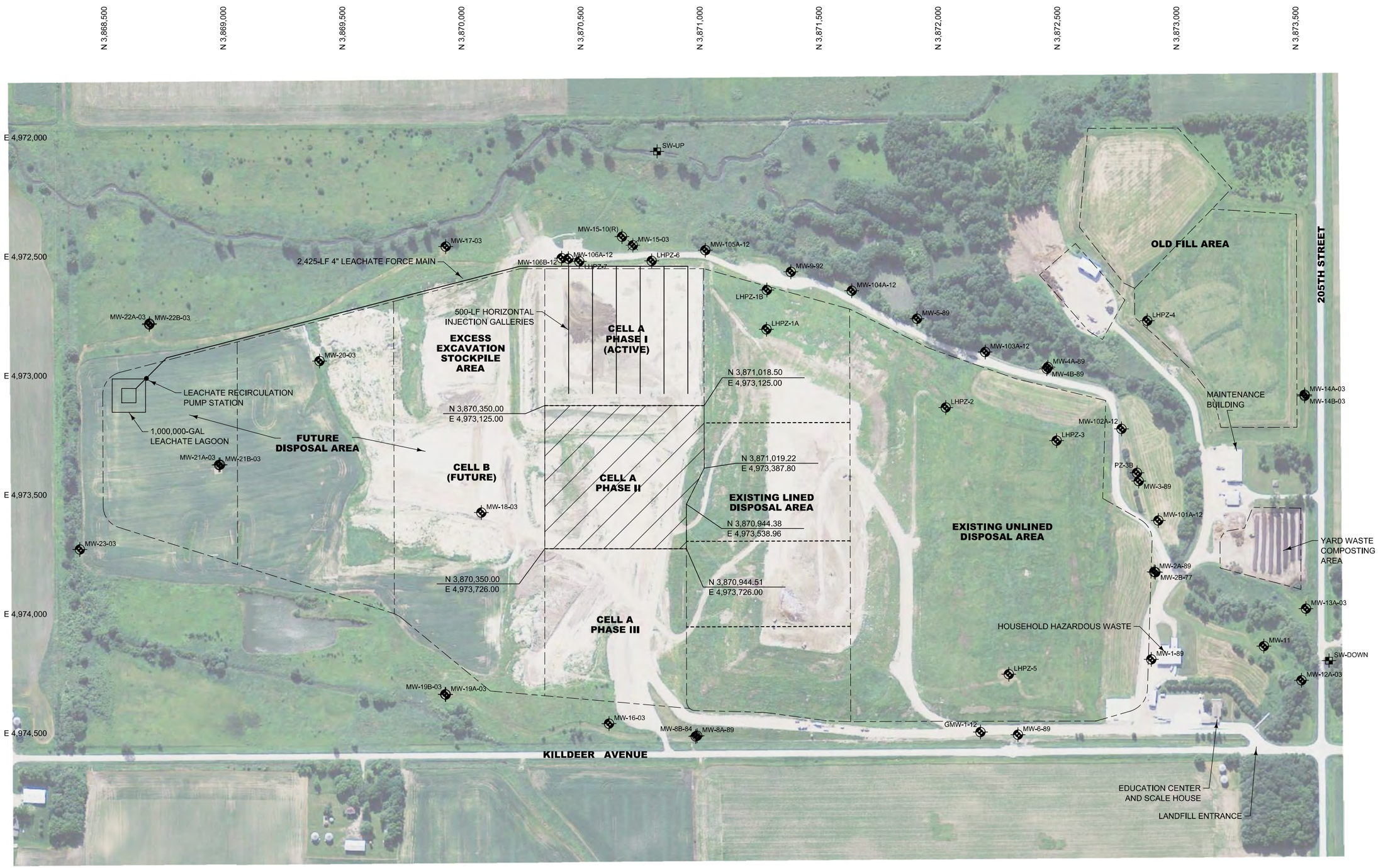

AERIAL SOURCE: SUMMER 2011

N

0' 100' 200' 400'
SCALE

REV	DESCRIPTION	DRN	CHK	DATE

1-INCH — VERIFY SCALE IF PLAN SHEET IS REDUCED

DRN BSC
DES CGO
CHK BSC
APP

AECOM
501 Sycamore Street, Suite 222
Waterloo, Iowa 50704-1497
T 319.232.6531 F 319.232.0271
WWW.AECOM.COM

LNI LEACHATE FEASIBILITY STUDY

HORIZONTAL INJECTION

DATE SEPT 2013
PROJECT NO 60303047
FILENAME LNI-A-PHII-Civil.Sht
SHEET NO 2
DRAWING NO 2

Waterloo, Iowa
...\plcfg\lt17.pdf.pltcfg, ...\tables\pen\BSC.PEN.TBL
Plotted by: Kurt.Bestenlehner@aecom.com
12/4/2014, 12:14:53 PM
Design File Pt:\60303047\900-WorkingDocs\CAD\02-SHEETS\LNI-Recirc REV02-NO GW.Sht, Model 3

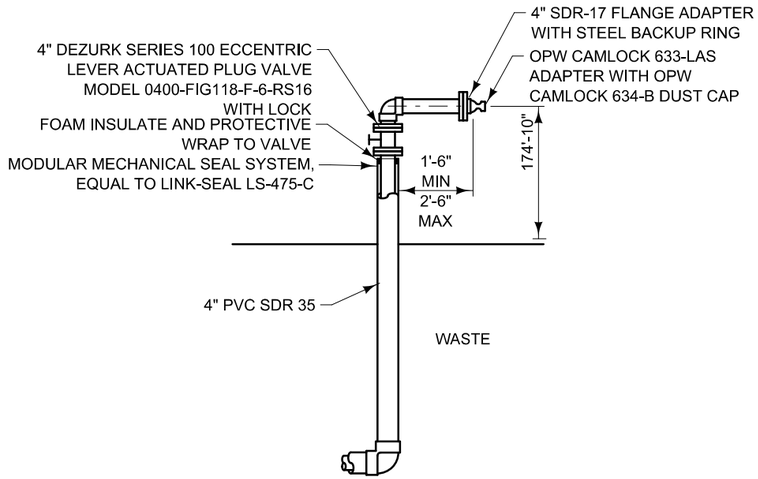

LOADOUT FORCE MAIN

NTS

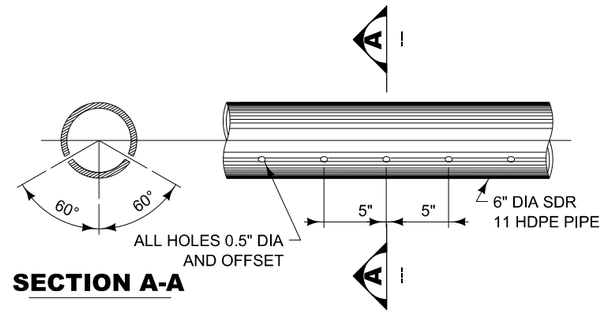

HDPE PIPE PERFORATION DETAIL

NTS

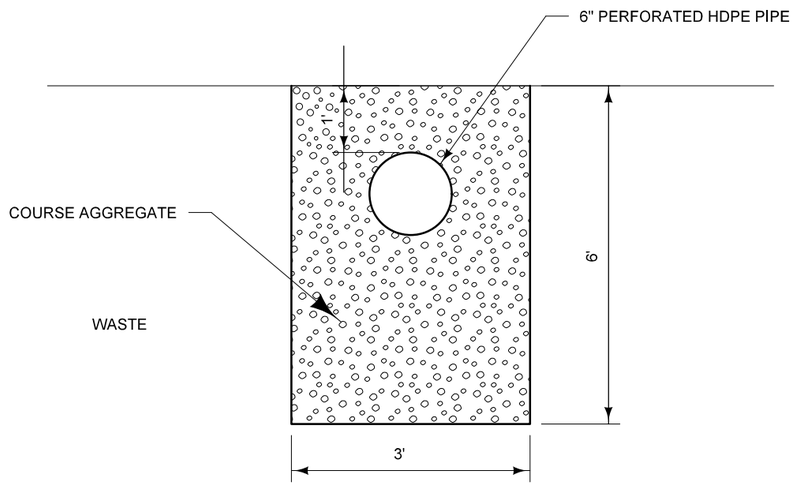

HORIZONTAL INJECTION TRENCH

NTS

REV	DESCRIPTION	DRN	CHK	DATE

1-INCH VERIFY SCALE IF PLAN SHEET IS REDUCED

DRN BSC
DES CGO
CHK BSC
APP

AECOM
501 Sycamore Street, Suite 222
Waterloo, Iowa 50704-1497
T 319.232.6531 F 319.232.0271
WWW.AECOM.COM

LNI LEACHATE FEASIBILITY STUDY

DETAILS

DATE	SEPT 2013
PROJECT NO	60303047
FILENAME	LNI-Recirc.Sht
SHEET NO	3
DRAWING NO	3

Waterloo, Iowa
...\plotcfg\ltr17.pdf.pltcfg, ...\tables\pen\BSC.PEN.TBL
Plotted by Chris Bauer
9/11/2013, 11:27:17 AM
Design File P:\60303047\900-WorkingDocs\CAD\02-SHEETS\LNI-Recirc.Sht, Model 4

Appendix B

Calculations and Historical Data

Leachate Recirculation Design Calculations
LNI Cell A, Phase 1

Prepared By: Chris Oelkers

Estimate the Moisture Absorption Capacity of the Waste

Waste Vol.	254,000	CY
Wast Compaction	1,394	PCY
Cell Area	8	AC

Assuming that field capacity = 55% and the in-place moisture content of the waste = 49%, the in-place waste can absorb about 6% more liquid. Therefore,

Moisture Absorption Capacity of the Waste =	10.03	gal/cy
	14.39	gal/ton
	2,547,309	gal

Estimate the Hydraulic Capacity of the Waste Mass

The hydraulic capacity of the waste mass can be estimated using Darcy's law.

Darcy's Law

Q = Kia where:

Q = flow =	gal/acre/day	
K = Hydraulic conductivity =	0.00001	cm/s
i = Hydraulic gradient =	1	
a = cross sectional area =	43,560	sf/acre

Q = 9,236 gal/acre/day

Maximum Hydraulic Capacity of the Leachate Collection System

The maximum rate of infiltration that the leachate collection system can handle without exceeding the regulatory headlevels can be calculated using Harr's equation.

Harr's Equation

$$h_{max} = L\sqrt{(e/k + \tan^2 \alpha)} - \tan \alpha$$

Where:

h_{max} = maximum head buildup = 1-ft per code

e = infiltration rate

k = permeability of drainage layer

α = slope of the landfill base

L = length of flowpath to leachate piping (max)

The equation needs to be modified to solve for e. The equation is as follows:

$$e = k[(h/L + \tan \alpha)^2 - \tan^2 \alpha]$$

k =	0	cm/sec		
hmax =	1	ft per NR 504.06(1)		
alpha =	2	% =	1.145762838	degrees
L =	200	ft = worst case situation		
e =	0	cm/sec =	**11,853 gal/acre/day =**	360,535 gal/acre/month

equated to inches of leachate / month = 13.27 inches/month

Summary

Moisture Absorption Capacity of the Waste =	14.39	gal/ton
Hydraulic Capacity of the Waste Mass =	9,236	gal/acre/day
Hydraulic Capacity of the Leachate Collection System =	11,853	gal/acre/day

Leachate Collection Rate

Leachate Volume	1,500,000	Gal/Yr
Operating Days	280	Days

If all of the leachate was discharged into cells , the average leachate application rate would be approximately

669.6 gal/acre/operating day
9.00 inches/year

Max Month 1,100,000 Gal

5288.5 gal /ac /operating day
71.09 inches/mo

Avg Month 121,000 Gal

720.2 gal /ac /operating day
9.68 inches/mo

LNI Historical Leachate Production

YEAR	NEW	OLD	TOTAL GAL	TOTAL CU FT	
2013	207,749	190,376	398,125	53,222	Thru 06/13
2012	295,431	404,457	699,888	93,561	
2011	1,510,667	577,853	2,088,520	279,195	
2010			4,115,818	550,205	
2009			1,342,630	179,484	
2008			681,500	91,103	
2007			823,627	110,103	
		AVG YR	1,450,015	193,839	

	HAULED TO MASON CITY GALLONS	COST TO HAUL TO MASON CITY	COST/GAL
2012	230,000	$15,000.00	$0.07

YR PROD RATE	RATE	YEARLY COST
1,500,000	$0.07	$97,826.09

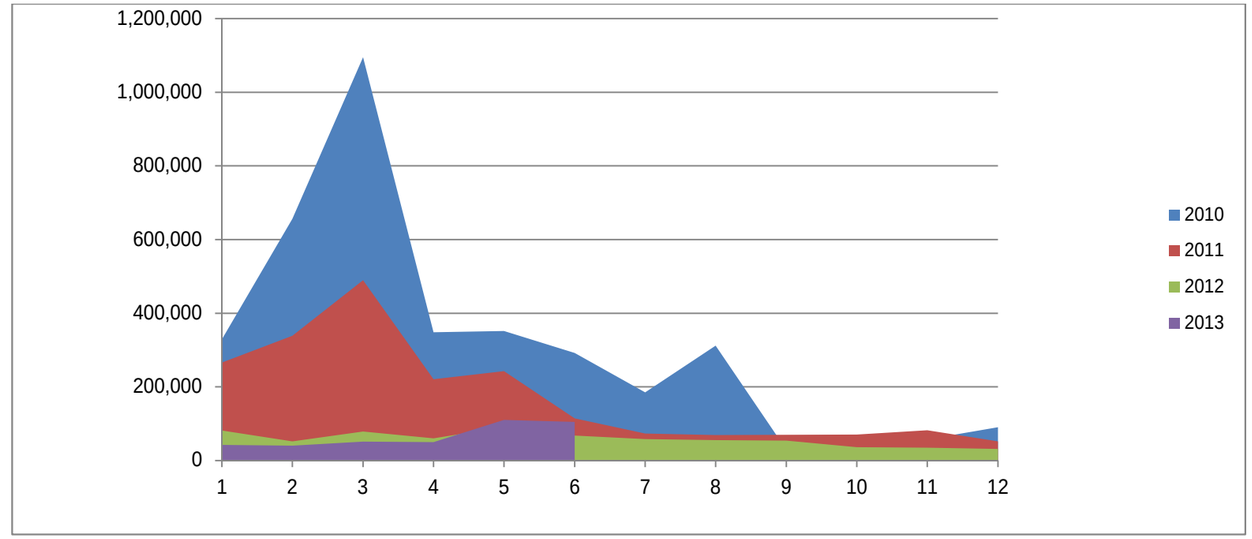

Month	2010 Old	2010 New	2010 Total	2011 Old	2011 New	2011 Total	2012 Old	2012 New	2012 total	2013 Old	2013 New	2013 total
1	38,434	290,504	328,938	38,147	227,770	265,917	17,719	63,556	81,275	27,457	14,794	42,251
2	43,160	612,905	656,065	61,774	277,036	338,810	22,092	29,754	51,846	25,356	14,576	39,932
3	46,986	1,048,313	1,095,299	81,099	408,712	489,811	36,599	41,927	78,526	25,064	26,073	51,137
4	43,256	304,869	348,125	62,780	158,209	220,989	36,198	23,798	59,996	21,413	28,763	50,176
5	77,653	274,220	351,873	71,773	170,580	242,353	74,467	16,413	90,880	34,798	75,111	109,909
6	69,725	222,428	292,153	59,166	55,082	114,248	43,404	23,961	67,365	56,288	48,432	104,720
7	41,045	143,624	184,669	43,341	29,901	73,242	33,792	24,206	57,998			
8	76,736	234,911	311,647	33,193	35,882	69,075	38,681	16,555	55,236			
9	29,121	0	29,121	33,267	36,476	69,743	35,124	19,069	54,193			
10	19,951	45,009	64,960	35,304	35,052	70,356	22,725	13,601	36,326			
11	25,931	31,159	57,090	30,193	52,160	82,353	22,695	11,937	34,632			
12	38,279	51,945	90,224	27,816	23,807	51,623	20,961	10,654	31,615			

Appendix C

HELP Model Report and Results

Client LNI	**Subject** Leachate Head	**Prepared By**	TCR	**Date**	9/5/13
Project Leachate	Analysis	**Reviewed By**	CO	**Date**	9/5/13
Recirculation Evaluation		**Approved By**	BB	**Date**	9/5/13

LEACHATE HEAD ANALYSIS

Objective

Estimate the maximum allowable leachate recirculation quantity based on maximum leachate head requirements at LNI when leachate is recirculated during filling of Cell A, using the USEPA Hydraulic Evaluation of Landfill Performance Version 3.07 (HELP) computer modeling program and site data.

Design Criteria and Assumptions

1. This analysis was performed to estimate leachate head and maximum allowable leachate recirculation rates in Cell A.

2. Active conditions are to be modeled as a conservative analysis. Active conditions refers to the situation of active waste placement and with 12 inches of soil cover in place (no final cover constructed).

3. Two HELP model analyses are performed. One for the Cell A base liner area and one for the overlay on the existing clay liner area. Due to the overlay liner, leachate generated in the overlay area flows to the Cell A base liner area.

HELP Model Version 3.07 Input:

4. Temperature, precipitation, and solar radiation data can be default data, user input or synthetically generated by the HELP model. Synthetically generated data for Des Moines, Iowa was used to simulate site weather conditions.

5. Geomembrane liner pinhole density and size were assumed to account for possible manufacturing defects during geomembrane production. The HELP Model User's Guide for Version 3.07 states that the pinhole density for a typical geomembrane is 0.5 to 1 pinhole per acre. One pinhole per acre was assumed to be present.

6. The placement quality for the geomembrane liner was assumed to be "good". A placement quality of "good" according to the HELP Model User's Guide "assumes good field installation with well prepared, smooth soil surface and geomembrane wrinkle control". The HELP Model User's Guide suggests 1 to 4 installation defects for an installation quality of "good". Two installation defects per acre were assumed for the geomembrane liner. This also reflects full time CQA during geomembrane installation.

7. The HELP model was used to calculate the curve number for both the Cell A base liner and overlay area based on the intermediate cover soil type, a minimum slope of 5 percent and a maximum slope length of 400 feet.. The typical slope lengths are based on conservatively assumed interim filling grades.

8. The initial moisture content of the waste layer was conservatively assumed to be at field capacity, which means that all liquid added to the waste mass will drain out and be collected as leachate.

9. Soil layers were generally modeled using HELP model default soil characteristics (porosity, field capacity, wilting point, saturated hydraulic conductivity). The exception is the leachate drainage layer which is modeled as a sand with a default saturated hydraulic conductivity adjusted to 5.7 x 10^{-2} cm/sec to reflect the results of CQA testing from the construction Cell A.

10. The longest flow path and shallowest slope along the base liner was input, resulting in the highest potential leachate head estimate.

    a. For the Cell A overlay area, the longest flow length is 520 feet and the minimum slope is approximately 25.0 percent. This information is based on the grades of the overlay onto the existing clay lined area.
    b. For the Cell A base liner, the longest flow length is 180 feet and the minimum slope is approximately 2.2 percent. This information is based on 2.0 percent slope toward the collection pipe, and a slope of 1.0 percent on the pipe.

11. A 1-acre design area was used for modeling purposes to compute unit quantities.

12. It is assumed that intermediate cover is in place in the Cell A area and that the working face of the landfill is approximately 10 percent of the Cell A area. All runoff from the working face area will be treated as leachate. The area of Cell A allowing rainwater runoff is, therefore, 90 percent.

13. To clearly identify the maximum quantity of leachate that can be recirculated based on the head on the liner, leachate recirculation is modeled as inflow into the waste mass.

14. To consider leachate from the overlay flowing across the base liner, the base liner analysis includes the average annual leachate volume generated in the overlay area modeled as inflow in the base liner leachate drainage layer.

15. Active Condition Inputs (see also Table 1):
    - 22 feet of waste (approximate existing waste depth in Cell A)
    - Bare ground conditions (no vegetation)
    - Evaporative zone depth = 8 in. (recommended by HELP Model for bare ground for Des Moines, Iowa)
    - Maximum leaf area index = 0 (recommended by HELP Model for bare ground)
    - Fraction of area allowing runoff = 90 percent
    - Runoff curve number = 91.8 (calculated by HELP model)
    - Length of model run = 10 years

Help Model General Layout

Table 1: Active Condition – Cell A HELP Model Layout

(Layer Number) Layer Description	Flow	Thickness	Saturated Hydraulic Conductivity	Soil Type/ Texture Number
(1)vertical percolation	↓	12 inches	1.9×10^{-4} cm/sec	Intermediate cover/#9
(2)vertical percolation	↓	264 inches	1.0×10^{-3} cm/sec	waste/#18
(3)lateral drainage	→	12 inches	5.7×10^{-2} cm/sec	sand/ #61
(4)60-mil geomembrane Liner	↓	0.06 inch	2.0×10^{-13} cm/sec	geomembrane/#35
(5)barrier soil	↓	24 inches	1.0×10^{-7} cm/sec	Compacted clay/#16

Table 2: Soil Texture Properties

Soil Texture	Soil Classification		Comments, Properties, and Uses
	USDA	USCS	
61	CoS	SP	Leachate drainage layer. Based on HELP model default soil parameter no. 1 with the hydraulic conductivity changed from 1.0×10^{-2} cm/sec to 5.7×10^{-2} cm/sec.
35	---	---	HELP model default parameters for High Density Polyethylene (HDPE) geomembrane.
18	---	---	HELP model default parameter for municipal solid waste.
16	Barrier Soil		HELP model default parameter for a barrier soil.
9	SiL	ML	HELP model default soil used to model intermediate cover.

Note: All soil properties are defaults of the HELP Model, Version 3.07 unless otherwise designated.

Calculations

Leachate Recirculation Quantity:

Assume 3,600 gallons/day per acre will be recirculated. For model purposes, assume leachate will be recirculated each day for the calendar year.

3,600 gal./day/ac. x 365 days/yr x 1 cf/7.48 gal. x 1 ac./43,560 sf x 12 in/ft = 48.39 in/yr

HELP Model Analysis:

Calculations performed by the HELP Model are included in the output located in the following pages. The HELP model provides results for peak daily, average monthly, and peak average annual values. To be conservative, peak daily results are considered in this analysis. See Table 3 for the modeling results based on peak daily values. The HELP Model presents peak daily results in inches per day and cubic feet per day.

Table 3: Peak Daily Results From HELP Analysis Output

Parameter	Overlay Area	Base Liner
Peak Daily Leachate Head on Base	2.968 inches	11.860 inches
Leachate Recirculation Quantity	48.39 in/yr (3,600 gal./ac./day)	48.39 in/yr (3,600 gal./ac./day)

NOTES:

1. Base liner leachate quantity includes the overlay leachate flowing across the base liner. The average annual leachate generation from the overlay, 51.90 in/yr, is input into the base liner analysis.
2. Refer to page 6 of each of the attached HELP Model output (filenames: LNI-A.OUT, and LNI-B.OUT).

Conclusions

Active conditions when Cell A is actively receiving waste with intermediate cover in place are summarized above. Including drainage from the overlay across a portion of the base liner, the maximum allowable leachate recirculation rate for the assumed conditions is 3,600 gallons/day per acre. For this leachate recirculation rate, based on conservative peak daily conditions, the head on the liner remains below 12 inches.

These values are estimated using a waste with an initial water content at field capacity. The HELP Model was used to calculate leachate volumes and head and should be considered only an estimate of potential field conditions.

ATTACHMENT 1

HELP MODEL OUTPUT – OVERLAY AREA
(FILENAME: LNI-A.OUT)

```
******************************************************************************
******************************************************************************
**                                                                          **
**                                                                          **
**              HYDROLOGIC EVALUATION OF LANDFILL PERFORMANCE               **
**                HELP MODEL VERSION 3.07  (1 NOVEMBER 1997)                **
**                  DEVELOPED BY ENVIRONMENTAL LABORATORY                   **
**                    USAE WATERWAYS EXPERIMENT STATION                     **
**             FOR USEPA RISK REDUCTION ENGINEERING LABORATORY              **
**                                                                          **
**                                                                          **
******************************************************************************
******************************************************************************



PRECIPITATION DATA FILE:    c:\temp\LNI4BAR.D4
TEMPERATURE DATA FILE:      C:\temp\LNI7BAR.D7
SOLAR RADIATION DATA FILE:  c:\temp\LNI13BAR.D13
EVAPOTRANSPIRATION DATA:    c:\temp\LNI11BAR.D11
SOIL AND DESIGN DATA FILE:  c:\temp\LNI-A.D10
OUTPUT DATA FILE:           c:\temp\LNI-A.OUT



TIME:  16:28     DATE:   9/ 3/2013



******************************************************************************

     TITLE:  LNI,Leachate Recirculation, Intermediate Cover, Overlay Area

******************************************************************************



     NOTE:  INITIAL MOISTURE CONTENT OF THE LAYERS AND SNOW WATER WERE
              COMPUTED AS NEARLY STEADY-STATE VALUES BY THE PROGRAM.



                                  LAYER  1
                                  --------

                     TYPE 1 - VERTICAL PERCOLATION LAYER
                         MATERIAL TEXTURE NUMBER   9
          THICKNESS                   =     12.00   INCHES
          POROSITY                    =      0.5010 VOL/VOL
          FIELD CAPACITY              =      0.2840 VOL/VOL
          WILTING POINT               =      0.1350 VOL/VOL
          INITIAL SOIL WATER CONTENT  =      0.3324 VOL/VOL
          EFFECTIVE SAT. HYD. COND.   =  0.190000006000E-03 CM/SEC
```

```
                        LAYER  2
                        --------

          TYPE 1 - VERTICAL PERCOLATION LAYER
              MATERIAL TEXTURE NUMBER  18
THICKNESS                   =    264.00   INCHES
POROSITY                    =      0.6710 VOL/VOL
FIELD CAPACITY              =      0.2920 VOL/VOL
WILTING POINT               =      0.0770 VOL/VOL
INITIAL SOIL WATER CONTENT  =      0.3299 VOL/VOL
EFFECTIVE SAT. HYD. COND.   =  0.100000005000E-02 CM/SEC
SUBSURFACE INFLOW           =     48.39   INCHES/YR


                        LAYER  3
                        --------

            TYPE 2 - LATERAL DRAINAGE LAYER
              MATERIAL TEXTURE NUMBER  61
THICKNESS                   =     12.00   INCHES
POROSITY                    =      0.4170 VOL/VOL
FIELD CAPACITY              =      0.0450 VOL/VOL
WILTING POINT               =      0.0180 VOL/VOL
INITIAL SOIL WATER CONTENT  =      0.0773 VOL/VOL
EFFECTIVE SAT. HYD. COND.   =  0.570000000000E-01 CM/SEC
SLOPE                       =     25.00   PERCENT
DRAINAGE LENGTH             =    520.0    FEET


                        LAYER  4
                        --------

            TYPE 4 - FLEXIBLE MEMBRANE LINER
              MATERIAL TEXTURE NUMBER  35
THICKNESS                   =      0.60   INCHES
POROSITY                    =      0.0000 VOL/VOL
FIELD CAPACITY              =      0.0000 VOL/VOL
WILTING POINT               =      0.0000 VOL/VOL
INITIAL SOIL WATER CONTENT  =      0.0000 VOL/VOL
EFFECTIVE SAT. HYD. COND.   =  0.199999996000E-12 CM/SEC
FML PINHOLE DENSITY         =      1.00   HOLES/ACRE
FML INSTALLATION DEFECTS    =      2.00   HOLES/ACRE
FML PLACEMENT QUALITY       =  3 - GOOD


                        LAYER  5
                        --------

              TYPE 3 - BARRIER SOIL LINER
              MATERIAL TEXTURE NUMBER  16
THICKNESS                   =     24.00   INCHES
POROSITY                    =      0.4270 VOL/VOL
FIELD CAPACITY              =      0.4180 VOL/VOL
WILTING POINT               =      0.3670 VOL/VOL
INITIAL SOIL WATER CONTENT  =      0.4270 VOL/VOL
EFFECTIVE SAT. HYD. COND.   =  0.100000001000E-06 CM/SEC
```

GENERAL DESIGN AND EVAPORATIVE ZONE DATA

NOTE: SCS RUNOFF CURVE NUMBER WAS COMPUTED FROM DEFAULT SOIL DATA BASE USING SOIL TEXTURE # 9 WITH BARE GROUND CONDITIONS, A SURFACE SLOPE OF 5.% AND A SLOPE LENGTH OF 400. FEET.

SCS RUNOFF CURVE NUMBER	=	91.80	
FRACTION OF AREA ALLOWING RUNOFF	=	90.0	PERCENT
AREA PROJECTED ON HORIZONTAL PLANE	=	1.000	ACRES
EVAPORATIVE ZONE DEPTH	=	8.0	INCHES
INITIAL WATER IN EVAPORATIVE ZONE	=	2.852	INCHES
UPPER LIMIT OF EVAPORATIVE STORAGE	=	4.008	INCHES
LOWER LIMIT OF EVAPORATIVE STORAGE	=	1.080	INCHES
INITIAL SNOW WATER	=	0.000	INCHES
INITIAL WATER IN LAYER MATERIALS	=	102.249	INCHES
TOTAL INITIAL WATER	=	102.249	INCHES
TOTAL SUBSURFACE INFLOW	=	48.39	INCHES/YEAR

EVAPOTRANSPIRATION AND WEATHER DATA

NOTE: EVAPOTRANSPIRATION DATA WAS OBTAINED FROM DES MOINES IOWA

STATION LATITUDE	=	41.53	DEGREES
MAXIMUM LEAF AREA INDEX	=	0.00	
START OF GROWING SEASON (JULIAN DATE)	=	112	
END OF GROWING SEASON (JULIAN DATE)	=	291	
EVAPORATIVE ZONE DEPTH	=	8.0	INCHES
AVERAGE ANNUAL WIND SPEED	=	10.90	MPH
AVERAGE 1ST QUARTER RELATIVE HUMIDITY	=	70.00	%
AVERAGE 2ND QUARTER RELATIVE HUMIDITY	=	64.00	%
AVERAGE 3RD QUARTER RELATIVE HUMIDITY	=	69.00	%
AVERAGE 4TH QUARTER RELATIVE HUMIDITY	=	70.00	%

NOTE: PRECIPITATION DATA WAS SYNTHETICALLY GENERATED USING COEFFICIENTS FOR DES MOINES IOWA

NORMAL MEAN MONTHLY PRECIPITATION (INCHES)

JAN/JUL	FEB/AUG	MAR/SEP	APR/OCT	MAY/NOV	JUN/DEC
1.01	1.12	2.20	3.21	3.96	4.18
3.22	4.11	3.09	2.16	1.52	1.05

NOTE: TEMPERATURE DATA WAS SYNTHETICALLY GENERATED USING COEFFICIENTS FOR DES MOINES IOWA

NORMAL MEAN MONTHLY TEMPERATURE (DEGREES FAHRENHEIT)

JAN/JUL	FEB/AUG	MAR/SEP	APR/OCT	MAY/NOV	JUN/DEC
18.60	24.50	35.10	50.50	62.10	71.60
76.70	73.90	65.10	54.20	38.60	25.70

NOTE: SOLAR RADIATION DATA WAS SYNTHETICALLY GENERATED USING
COEFFICIENTS FOR DES MOINES IOWA
AND STATION LATITUDE = 41.53 DEGREES

****

AVERAGE MONTHLY VALUES IN INCHES FOR YEARS 1 THROUGH 10

	JAN/JUL	FEB/AUG	MAR/SEP	APR/OCT	MAY/NOV	JUN/DEC
PRECIPITATION						
TOTALS	0.75	1.06	2.49	2.62	4.11	4.20
	3.89	4.12	3.05	2.34	1.69	0.84
STD. DEVIATIONS	0.33	0.49	0.91	0.85	2.00	1.66
	2.12	2.42	1.34	0.93	1.08	0.47
RUNOFF						
TOTALS	0.038	0.340	1.198	0.184	0.572	0.481
	0.422	0.540	0.336	0.170	0.124	0.063
STD. DEVIATIONS	0.063	0.374	0.875	0.232	0.659	0.561
	0.654	0.607	0.280	0.117	0.172	0.143
EVAPOTRANSPIRATION						
TOTALS	0.511	0.438	1.011	2.642	2.933	3.473
	3.037	3.229	2.075	1.977	1.312	0.573
STD. DEVIATIONS	0.185	0.134	0.482	0.867	1.173	1.200
	1.091	1.600	0.954	0.487	0.450	0.181
SUBSURFACE INFLOW INTO LAYER 2						
TOTALS	0.0000	0.0000	0.0000	0.0000	0.0000	0.0000
	0.0000	0.0000	0.0000	0.0000	0.0000	0.0000
LATERAL DRAINAGE COLLECTED FROM LAYER 3						
TOTALS	4.4034	3.8287	4.1610	3.9284	4.5736	4.4015
	4.5462	4.4386	4.2994	4.4083	4.3396	4.5669
STD. DEVIATIONS	0.1654	0.1260	0.1917	0.3631	0.6365	0.3959
	0.4820	0.3812	0.2382	0.3655	0.3393	0.3932
PERCOLATION/LEAKAGE THROUGH LAYER 5						
TOTALS	0.0000	0.0000	0.0000	0.0000	0.0000	0.0000
	0.0000	0.0000	0.0000	0.0000	0.0000	0.0000

STD. DEVIATIONS	0.0000	0.0000	0.0000	0.0000	0.0000	0.0000
	0.0000	0.0000	0.0000	0.0000	0.0000	0.0000

AVERAGES OF MONTHLY AVERAGED DAILY HEADS (INCHES)

DAILY AVERAGE HEAD ON TOP OF LAYER 4

AVERAGES	0.9714	0.9285	0.9180	0.8956	1.0090	1.0034
	1.0030	0.9792	0.9801	0.9725	0.9893	1.0075
STD. DEVIATIONS	0.0365	0.0248	0.0423	0.0828	0.1404	0.0903
	0.1063	0.0841	0.0543	0.0806	0.0774	0.0867

****

****

AVERAGE ANNUAL TOTALS & (STD. DEVIATIONS) FOR YEARS 1 THROUGH 10

	INCHES		CU. FEET	PERCENT
PRECIPITATION	31.17	(3.694)	113139.9	100.00
RUNOFF	4.468	(1.8607)	16217.71	14.334
EVAPOTRANSPIRATION	23.209	(2.0431)	84248.49	74.464
SUBSURFACE INFLOW INTO LAYER 2	0.00000		0.000	0.00000
LATERAL DRAINAGE COLLECTED FROM LAYER 3	**51.89559**	(1.64253)	188380.984	166.50276
PERCOLATION/LEAKAGE THROUGH LAYER 5	0.00054	(0.00002)	1.950	0.00172
AVERAGE HEAD ON TOP OF LAYER 4	0.971	(0.031)		
CHANGE IN WATER STORAGE	0.012	(0.7163)	42.66	0.038

****

****

PEAK DAILY VALUES FOR YEARS 1 THROUGH 10

	(INCHES)	(CU. FT.)
PRECIPITATION	3.73	13539.900
RUNOFF	1.903	6909.2485
DRAINAGE COLLECTED FROM LAYER 3	0.21891	794.63153
PERCOLATION/LEAKAGE THROUGH LAYER 5	0.000002	0.00790
AVERAGE HEAD ON TOP OF LAYER 4	1.497	
MAXIMUM HEAD ON TOP OF LAYER 4	**2.968**	
LOCATION OF MAXIMUM HEAD IN LAYER 3 (DISTANCE FROM DRAIN)	0.0 FEET	
SNOW WATER	1.60	5801.4565

MAXIMUM VEG. SOIL WATER (VOL/VOL) 0.4592

MINIMUM VEG. SOIL WATER (VOL/VOL) 0.1350

*** Maximum heads are computed using McEnroe's equations. ***

Reference: Maximum Saturated Depth over Landfill Liner
by Bruce M. McEnroe, University of Kansas
ASCE Journal of Environmental Engineering
Vol. 119, No. 2, March 1993, pp. 262-270.

****

****

FINAL WATER STORAGE AT END OF YEAR 10

LAYER	(INCHES)	(VOL/VOL)
1	3.5346	0.2946
2	87.4242	0.3312
3	0.9542	0.0795
4	0.0000	0.0000
5	10.2480	0.4270
SNOW WATER	0.206	

****
****

ATTACHMENT 2

HELP MODEL OUTPUT – BASE LINER
(FILENAME: LNI-B.OUT)

```
******************************************************************************
******************************************************************************
**                                                                          **
**                                                                          **
**              HYDROLOGIC EVALUATION OF LANDFILL PERFORMANCE               **
**                HELP MODEL VERSION 3.07  (1 NOVEMBER 1997)                **
**                  DEVELOPED BY ENVIRONMENTAL LABORATORY                   **
**                    USAE WATERWAYS EXPERIMENT STATION                     **
**             FOR USEPA RISK REDUCTION ENGINEERING LABORATORY              **
**                                                                          **
**                                                                          **
******************************************************************************
******************************************************************************



PRECIPITATION DATA FILE:    c:\temp\LNI4BAR.D4
TEMPERATURE DATA FILE:      C:\temp\LNI7BAR.D7
SOLAR RADIATION DATA FILE:  c:\temp\LNI13BAR.D13
EVAPOTRANSPIRATION DATA:    c:\temp\LNI11BAR.D11
SOIL AND DESIGN DATA FILE:  c:\temp\LNI-B.D10
OUTPUT DATA FILE:           c:\temp\LNI-B.OUT



TIME:  16:29     DATE:   9/ 3/2013



******************************************************************************

     TITLE:  LNI,Leachate Recirculation, Intermediate Cover, Cell Base

******************************************************************************



     NOTE:  INITIAL MOISTURE CONTENT OF THE LAYERS AND SNOW WATER WERE
              COMPUTED AS NEARLY STEADY-STATE VALUES BY THE PROGRAM.



                                  LAYER  1
                                  --------

                     TYPE 1 - VERTICAL PERCOLATION LAYER
                         MATERIAL TEXTURE NUMBER   9
          THICKNESS                  =     12.00   INCHES
          POROSITY                   =      0.5010 VOL/VOL
          FIELD CAPACITY             =      0.2840 VOL/VOL
          WILTING POINT              =      0.1350 VOL/VOL
          INITIAL SOIL WATER CONTENT =      0.3324 VOL/VOL
          EFFECTIVE SAT. HYD. COND.  =  0.190000006000E-03 CM/SEC
```

```
                         LAYER  2
                         --------

          TYPE 1 - VERTICAL PERCOLATION LAYER
              MATERIAL TEXTURE NUMBER  18
THICKNESS                   =    264.00   INCHES
POROSITY                    =      0.6710 VOL/VOL
FIELD CAPACITY              =      0.2920 VOL/VOL
WILTING POINT               =      0.0770 VOL/VOL
INITIAL SOIL WATER CONTENT  =      0.3299 VOL/VOL
EFFECTIVE SAT. HYD. COND.   =  0.100000005000E-02 CM/SEC
SUBSURFACE INFLOW           =     48.39   INCHES/YR


                         LAYER  3
                         --------

            TYPE 2 - LATERAL DRAINAGE LAYER
              MATERIAL TEXTURE NUMBER  61
THICKNESS                   =     12.00   INCHES
POROSITY                    =      0.4170 VOL/VOL
FIELD CAPACITY              =      0.0450 VOL/VOL
WILTING POINT               =      0.0180 VOL/VOL
INITIAL SOIL WATER CONTENT  =      0.2713 VOL/VOL
EFFECTIVE SAT. HYD. COND.   =  0.570000000000E-01 CM/SEC
SLOPE                       =      2.20   PERCENT
DRAINAGE LENGTH             =    180.0    FEET
SUBSURFACE INFLOW           =     51.90   INCHES/YR


                         LAYER  4
                         --------

            TYPE 4 - FLEXIBLE MEMBRANE LINER
              MATERIAL TEXTURE NUMBER  35
THICKNESS                   =      0.60   INCHES
POROSITY                    =      0.0000 VOL/VOL
FIELD CAPACITY              =      0.0000 VOL/VOL
WILTING POINT               =      0.0000 VOL/VOL
INITIAL SOIL WATER CONTENT  =      0.0000 VOL/VOL
EFFECTIVE SAT. HYD. COND.   =  0.199999996000E-12 CM/SEC
FML PINHOLE DENSITY         =      1.00   HOLES/ACRE
FML INSTALLATION DEFECTS    =      2.00   HOLES/ACRE
FML PLACEMENT QUALITY       =  3 - GOOD


                         LAYER  5
                         --------

              TYPE 3 - BARRIER SOIL LINER
              MATERIAL TEXTURE NUMBER  16
THICKNESS                   =     24.00   INCHES
POROSITY                    =      0.4270 VOL/VOL
FIELD CAPACITY              =      0.4180 VOL/VOL
WILTING POINT               =      0.3670 VOL/VOL
INITIAL SOIL WATER CONTENT  =      0.4270 VOL/VOL
EFFECTIVE SAT. HYD. COND.   =  0.100000001000E-06 CM/SEC
```

GENERAL DESIGN AND EVAPORATIVE ZONE DATA

NOTE: SCS RUNOFF CURVE NUMBER WAS COMPUTED FROM DEFAULT SOIL DATA BASE USING SOIL TEXTURE # 9 WITH BARE GROUND CONDITIONS, A SURFACE SLOPE OF 5.% AND A SLOPE LENGTH OF 400. FEET.

SCS RUNOFF CURVE NUMBER	=	91.80	
FRACTION OF AREA ALLOWING RUNOFF	=	90.0	PERCENT
AREA PROJECTED ON HORIZONTAL PLANE	=	1.000	ACRES
EVAPORATIVE ZONE DEPTH	=	8.0	INCHES
INITIAL WATER IN EVAPORATIVE ZONE	=	2.852	INCHES
UPPER LIMIT OF EVAPORATIVE STORAGE	=	4.008	INCHES
LOWER LIMIT OF EVAPORATIVE STORAGE	=	1.080	INCHES
INITIAL SNOW WATER	=	0.000	INCHES
INITIAL WATER IN LAYER MATERIALS	=	104.578	INCHES
TOTAL INITIAL WATER	=	104.578	INCHES
TOTAL SUBSURFACE INFLOW	=	100.29	INCHES/YEAR

EVAPOTRANSPIRATION AND WEATHER DATA

NOTE: EVAPOTRANSPIRATION DATA WAS OBTAINED FROM DES MOINES IOWA

STATION LATITUDE	=	41.53	DEGREES
MAXIMUM LEAF AREA INDEX	=	0.00	
START OF GROWING SEASON (JULIAN DATE)	=	112	
END OF GROWING SEASON (JULIAN DATE)	=	291	
EVAPORATIVE ZONE DEPTH	=	8.0	INCHES
AVERAGE ANNUAL WIND SPEED	=	10.90	MPH
AVERAGE 1ST QUARTER RELATIVE HUMIDITY	=	70.00	%
AVERAGE 2ND QUARTER RELATIVE HUMIDITY	=	64.00	%
AVERAGE 3RD QUARTER RELATIVE HUMIDITY	=	69.00	%
AVERAGE 4TH QUARTER RELATIVE HUMIDITY	=	70.00	%

NOTE: PRECIPITATION DATA WAS SYNTHETICALLY GENERATED USING COEFFICIENTS FOR DES MOINES IOWA

NORMAL MEAN MONTHLY PRECIPITATION (INCHES)

JAN/JUL	FEB/AUG	MAR/SEP	APR/OCT	MAY/NOV	JUN/DEC
1.01	1.12	2.20	3.21	3.96	4.18
3.22	4.11	3.09	2.16	1.52	1.05

NOTE: TEMPERATURE DATA WAS SYNTHETICALLY GENERATED USING COEFFICIENTS FOR DES MOINES IOWA

NORMAL MEAN MONTHLY TEMPERATURE (DEGREES FAHRENHEIT)

JAN/JUL	FEB/AUG	MAR/SEP	APR/OCT	MAY/NOV	JUN/DEC
18.60	24.50	35.10	50.50	62.10	71.60
76.70	73.90	65.10	54.20	38.60	25.70

NOTE: SOLAR RADIATION DATA WAS SYNTHETICALLY GENERATED USING
COEFFICIENTS FOR DES MOINES IOWA
AND STATION LATITUDE = 41.53 DEGREES

****

AVERAGE MONTHLY VALUES IN INCHES FOR YEARS 1 THROUGH 10

	JAN/JUL	FEB/AUG	MAR/SEP	APR/OCT	MAY/NOV	JUN/DEC
PRECIPITATION						
TOTALS	0.75	1.06	2.49	2.62	4.11	4.20
	3.89	4.12	3.05	2.34	1.69	0.84
STD. DEVIATIONS	0.33	0.49	0.91	0.85	2.00	1.66
	2.12	2.42	1.34	0.93	1.08	0.47
RUNOFF						
TOTALS	0.038	0.340	1.198	0.184	0.572	0.481
	0.422	0.540	0.336	0.170	0.124	0.063
STD. DEVIATIONS	0.063	0.374	0.875	0.232	0.659	0.561
	0.654	0.607	0.280	0.117	0.172	0.143
EVAPOTRANSPIRATION						
TOTALS	0.511	0.438	1.011	2.642	2.933	3.473
	3.037	3.229	2.075	1.977	1.312	0.573
STD. DEVIATIONS	0.185	0.134	0.482	0.867	1.173	1.200
	1.091	1.600	0.954	0.487	0.450	0.181
SUBSURFACE INFLOW INTO LAYER 2						
TOTALS	0.0000	0.0000	0.0000	0.0000	0.0000	0.0000
	0.0000	0.0000	0.0000	0.0000	0.0000	0.0000
SUBSURFACE INFLOW INTO LAYER 3						
TOTALS	0.0000	0.0000	0.0000	0.0000	0.0000	0.0000
	0.0000	0.0000	0.0000	0.0000	0.0000	0.0000
LATERAL DRAINAGE COLLECTED FROM LAYER 3						
TOTALS	8.8559	7.8843	8.5620	8.1697	8.9485	8.6263
	8.9534	8.8702	8.5623	8.7758	8.6612	8.9407
STD. DEVIATIONS	0.1876	0.1523	0.0873	0.3261	0.5049	0.2522
	0.5350	0.3739	0.2035	0.3962	0.3545	0.3586

```
  PERCOLATION/LEAKAGE THROUGH LAYER  5
  ------------------------------------
    TOTALS                 0.0003   0.0003   0.0003   0.0003   0.0003   0.0003
                           0.0003   0.0003   0.0003   0.0003   0.0003   0.0003

    STD. DEVIATIONS        0.0000   0.0000   0.0000   0.0000   0.0000   0.0000
                           0.0000   0.0000   0.0000   0.0000   0.0000   0.0000


-------------------------------------------------------------------------------
               AVERAGES OF MONTHLY AVERAGED DAILY HEADS (INCHES)
-------------------------------------------------------------------------------


  DAILY AVERAGE HEAD ON TOP OF LAYER  4
  -------------------------------------
    AVERAGES               7.2366   7.0822   6.9965   6.8984   7.3123   7.2840
                           7.3163   7.2483   7.2299   7.1711   7.3134   7.3059

    STD. DEVIATIONS        0.1533   0.0738   0.0715   0.2754   0.4126   0.2129
                           0.4372   0.3055   0.1719   0.3237   0.2993   0.2930

*******************************************************************************

*******************************************************************************

     AVERAGE ANNUAL TOTALS & (STD. DEVIATIONS) FOR YEARS    1 THROUGH   10
-------------------------------------------------------------------------------
                                       INCHES            CU. FEET       PERCENT
                                  -------------------   -------------   ---------
 PRECIPITATION                     31.17    (   3.694)     113139.9     100.00

 RUNOFF                             4.468   (  1.8607)      16217.71     14.334

 EVAPOTRANSPIRATION                23.209   (  2.0431)      84248.49     74.464

 SUBSURFACE INFLOW INTO             0.00000                     0.000    0.00000
   LAYER  2

 SUBSURFACE INFLOW INTO             0.00000                     0.000    0.00000
   LAYER  3

 LATERAL DRAINAGE COLLECTED       103.81023 (  1.58399)    376831.125  333.06665
   FROM LAYER  3

 PERCOLATION/LEAKAGE THROUGH        0.00334 (  0.00005)        12.114     0.01071
   LAYER  5

 AVERAGE HEAD ON TOP                7.200 (    0.112)
   OF LAYER  4

 CHANGE IN WATER STORAGE            0.018   (  0.7319)         66.57      0.059

*******************************************************************************
```

****

PEAK DAILY VALUES FOR YEARS 1 THROUGH 10

	(INCHES)	(CU. FT.)
PRECIPITATION	3.73	13539.900
RUNOFF	1.903	6909.2485
DRAINAGE COLLECTED FROM LAYER 3	0.34007	1234.45789
PERCOLATION/LEAKAGE THROUGH LAYER 5	0.000011	0.03917
AVERAGE HEAD ON TOP OF LAYER 4	8.615	
MAXIMUM HEAD ON TOP OF LAYER 4	**11.860**	
LOCATION OF MAXIMUM HEAD IN LAYER 3 (DISTANCE FROM DRAIN)	56.0 FEET	
SNOW WATER	1.60	5801.4565

MAXIMUM VEG. SOIL WATER (VOL/VOL) 0.4592

MINIMUM VEG. SOIL WATER (VOL/VOL) 0.1350

*** Maximum heads are computed using McEnroe's equations. ***

Reference: Maximum Saturated Depth over Landfill Liner
by Bruce M. McEnroe, University of Kansas
ASCE Journal of Environmental Engineering
Vol. 119, No. 2, March 1993, pp. 262-270.

****

****

FINAL WATER STORAGE AT END OF YEAR 10

LAYER	(INCHES)	(VOL/VOL)
1	3.5346	0.2946
2	87.4242	0.3312
3	3.3487	0.2791
4	0.0000	0.0000
5	10.2480	0.4270
SNOW WATER	0.206	

****
****